MODEL "SV"
SECTIONAL BODY
DIRECTIONAL CONTROL VALVE
PARTS MANUAL

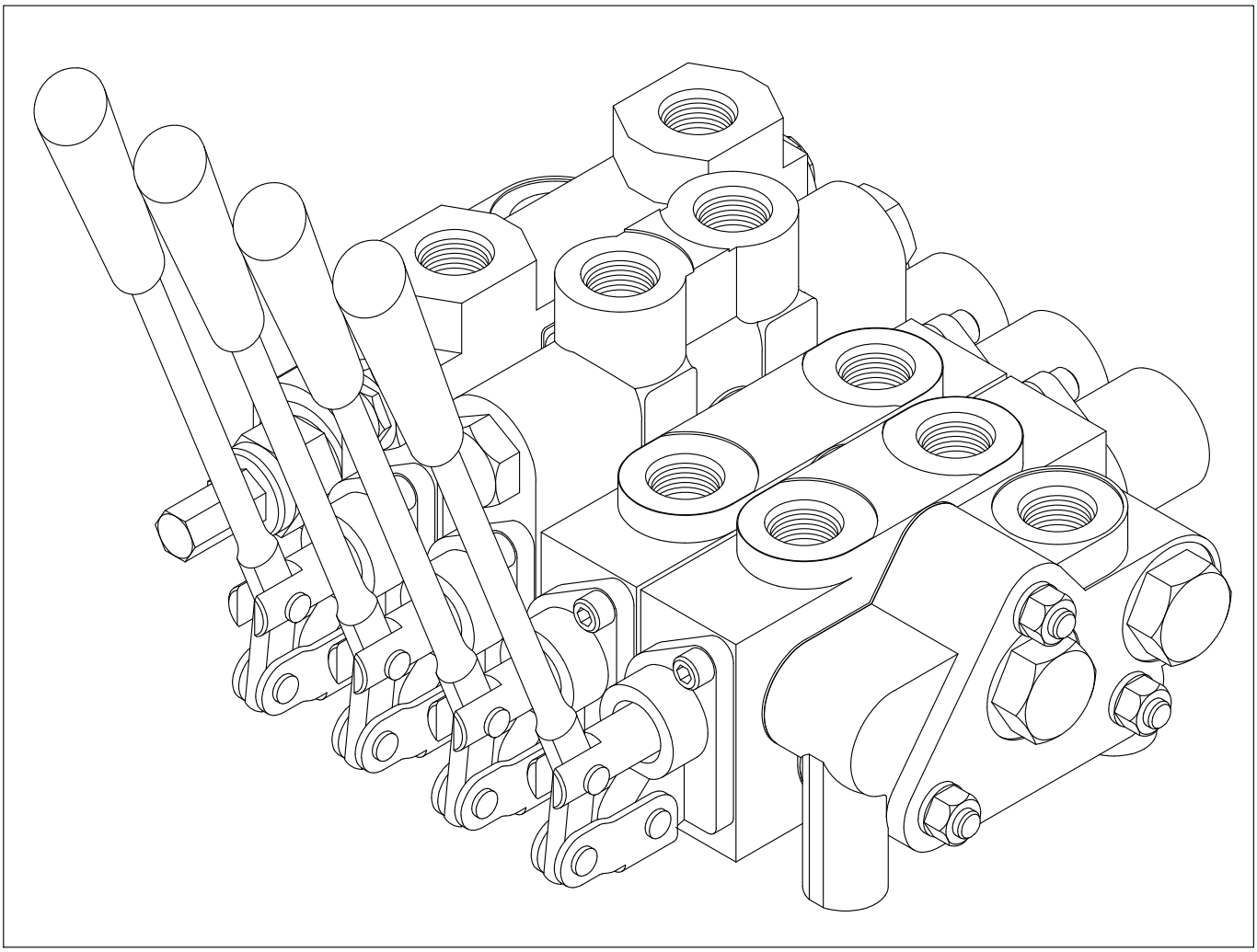

PRINCE MANUFACTURING CORPORATION

CONTENTS

PAGE:	
2	SAFETY PRECAUTIONS
3	ASSEMBLY INSTRUCTIONS, PORT IDENTIFICATION, AND SPECIFICATIONS
4–8	WORK SECTIONS
9	SPOOL IDENTIFICATION CHART
10	PORT RELIEF CARTRIDGES
11–16	SPOOL ATTACHMENT OPTIONS
17–23	HANDLE & JOYSTICK OPTIONS
24–29	INLET, MID–INLET & OUTLET SECTIONS
30–34	SOLENOID OPERATED SECTIONS
35	INSTALLATION EXAMPLE

Date: Oct. 2024

GENERAL SAFETY PRECAUTIONS FOR HYDRAULIC VALVES

1) ALL HYDRAULIC VALVES MUST BE PROPERLY INSTALLED INTO THE HYDRAULIC SYSTEM TO PREVENT PERSONAL INJURY AND/OR PROPERTY DAMAGE. FURTHER, THE IMPROPER SERVICING OF A VALVE MAY RESULT IN PERSONAL INJURY AND/OR PROPERTY DAMAGE. PLEASE READ AND UNDERSTAND ALL CATALOG AND SERVICE INFORMATION BEFORE STARTING. AS WITH ALL MECHANICAL WORK THE PROPER TOOLS, KNOWLEDGE, AND SAFETY EQUIPMENT ARE REQUIRED. ALWAYS WEAR SAFETY GLASSES.

2) MAKE SURE ALL PRESSURE HAS BEEN RELIEVED IN THE HYDRAULIC LINES BEFORE INSTALLING OR SERVICING A HYDRAULIC VALVE.

WARNING: ESCAPING HYDRAULIC FLUID UNDER PRESSURE CAN HAVE SUFFICIENT FORCE TO PENETRATE SKIN, CAUSING SERIOUS PERSONAL INJURY. DO NOT USE YOUR HAND TO CHECK FOR HYDRAULIC LEAKS.

3) BEFORE INSTALLING OR SERVICING A HYDRAULIC COMPONENT MAKE SURE ALL WEIGHT HAS BEEN REMOVED FROM THE CYLINDERS OR MOTORS BEFORE DISCONNECTING HYDRAULIC LINES.

WARNING: DISCONNECTING THE HYDRAULIC LINES WHILE THE CYLINDER OR MOTOR IS UNDER LOAD MAY RESULT IN THE UNEXPECTED RAPID MOVEMENT OF MACHINE RESULTING IN SERIOUS PERSONAL INJURY.

4) DO NOT EXCEED THE OPERATING SPECIFICATIONS FOR PRESSURE, FLOW OR TEMPERATURE. ALL HYDRAULIC SYSTEMS REQUIRE A MEANS TO LIMIT THE MAXIMUM PRESSURE. THIS REQUIRES EITHER A PRESSURE RELIEF VALVE IN THE SYSTEM OR A PUMP THAT HAS PRESSURE COMPENSATION.

WARNING: OVERPRESSURE MAY CAUSE SUDDEN AND UNEXPECTED FAILURE OF A COMPONENT IN THE HYDRAULIC SYSTEM RESULTING IN SERIOUS PERSONAL INJURY. ALWAYS USE A GAUGE WHEN ADJUSTING A RELIEF VALVE.

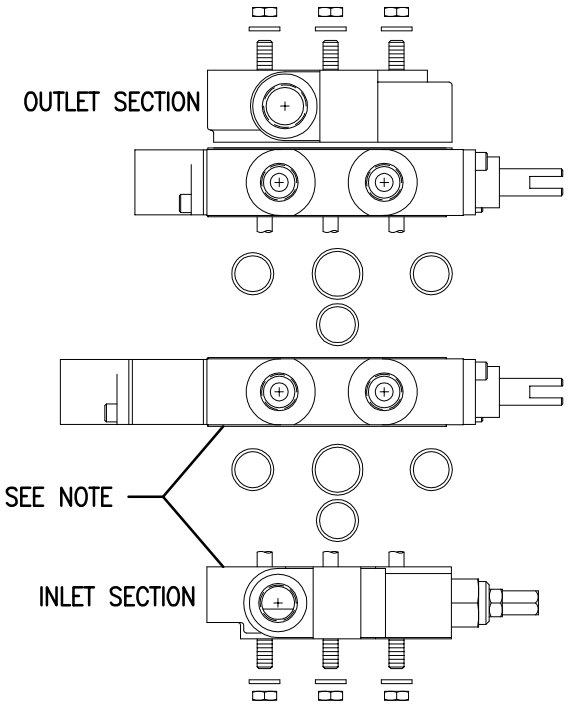

TIEROD KITS (DOES NOT INCLUDE SEALS):

PART NO.:		PART NO.:	
660401001	1 SECTION*	660401005	5 SECTION*
660401002	2 SECTION*	660401006	6 SECTION*
660401003	3 SECTION*	660401007	7 SECTION*
660401004	4 SECTION*	660401008	8 SECTION*

*NUMBER OF WORK SECTIONS

PLEASE NOTE: BE VERY CAREFUL NOT TO NICK OR SCRATCH THE PRECISION GROUND SURFACES ON THE SECTIONS. ALSO TAKE CARE TO KEEP THESE SURFACES CLEAN DURING ASSEMBLY.

ASSEMBLY INSTRUCTIONS:

1. THE ASSEMBLY TABLE AND ASSEMBLY AREA MUST BE CLEAN AND SHOULD NOT BE SUBJECT TO PARTICULATE FALLOUT.
2. ANY HYDRAULIC FITTINGS, LINES OR FLUIDS SHOULD BE CLEAN.
3. THE SECTIONS SHOULD BE LAID OUT ON THE TABLE (WITH THE ORING GROOVES FACING UP) IN ORDER OF ASSEMBLY. WIPE GROUND SURFACES CLEAN WITH A LINT FREE CLOTH AND CHECK ORING GROOVES FOR DEBRIS. PLACE LIGHTLY OILED ORINGS INTO ORING GROOVES. DO NOT USE GREASE ON ORINGS OR IN ORING GROOVES.
4. INSTALL NUTS AND LOCK WASHERS ON ONE END OF EACH TIEROD.
5. INSERT TIERODS, WITH NUTS INSTALLED ON ONE END, THROUGH HOLES IN THE INLET SECTION.
6. POSITION THE INLET SECTION, WITH TIERODS INSTALLED, ON ITS SIDE SO TIERODS ARE VERTICAL.
7. SLIDE THE WORK SECTIONS DOWN THE TIERODS AND POSITION OVER THE INLET SECTION.
8. REPEAT FOR REMAINING WORK SECTIONS AND OUTLET. MAKE CERTAIN ORINGS STAY IN GROOVES DURING ASSEMBLY.
9. INSTALL NUTS AND LOCK WASHERS ONTO OUTLET END OF TIERODS. WITH SOME DOWNWARD PRESSURE ON THE ASSEMBLY, TIGHTEN THE NUTS TILL THEY ARE SNUG.
10. ROLL THE ASSEMBLY SO THAT THE TIERODS ARE HORIZONTAL AND THE WORK PORTS ARE FACING UPWARD. TO LEVEL THE INLET CASTING, SLIDE A 1" X 1" X .3" HIGH SPACER UNDER THE RELIEF END CASTING.
11. USING A TORQUE WRENCH, PROGRESSIVELY TIGHTEN TIEROD NUTS TO 150 ±6 IN-LB (12.5 ±.5 FT-LB).
12. INSTALL HANDLES AND OPERATE SPOOLS. MAKE CERTAIN THAT SPOOLS DO NOT BIND, AND THAT SPOOLS WITH SPRING CENTER FREELY RETURN TO NEUTRAL.
13. IF A SPOOL BINDS LOOSEN TIEROD NUTS. RE-TORQUE ALL NUTS TO 8, THEN 10, AND FINALLY 12.5 FT-LB.
14. IF A SPOOL STILL BINDS CHECK FOR A PINCHED O-RING OR CONTAMINATION BETWEEN THE SECTIONS. DO NOT USE THE VALVE IF A SPOOL BINDS.

PORT IDENTIFICATION

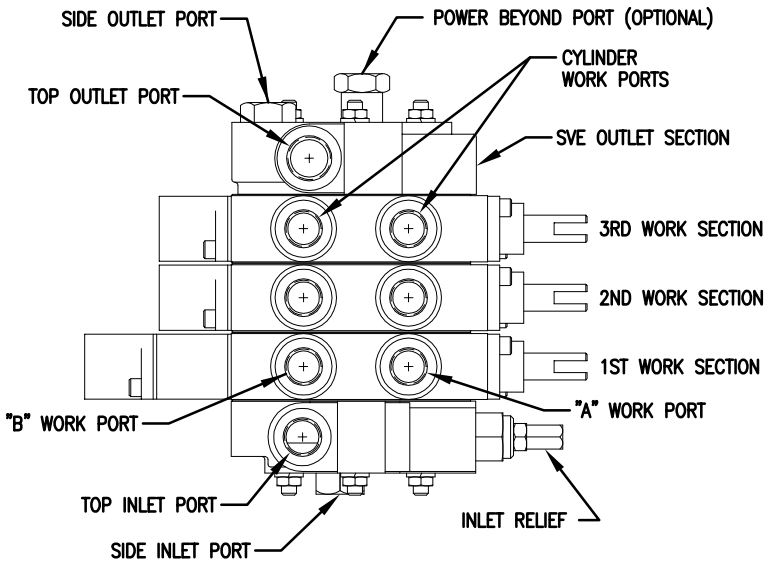

PLEASE NOTE:
UNUSED INLET AND OUTLET PORT MUST BE PLUGGED WITH STEEL PLUG. WHEN OPTIONAL POWER BEYOND IS USED AN OUTLET PORT MUST ALSO BE CONNECTED TO TANK.

MODEL SV SPECIFICATIONS

MAXIMUM OPERATING PRESSURE.....3000 PSI
MAXIMUM TANK PRESSURE.....500 PSI
MAXIMUM OPERATING TEMPERATURE.....180°F
RECOMMENDED FILTRATION....ISO 4406 19/17/14
NOMINAL FLOW RATING.....12 GPM
REFER TO CATALOG FOR PRESSURE DROPS

WORK SECTIONS SVW, SVH, SVL, SVM, SVF, SVG AND SVR ARE PARALLEL CIRCUIT CONSTRUCTION. WORK SECTION SVS IS SERIES CIRCUIT CONSTRUCTION.

SVW PARALLEL WORK SECTION

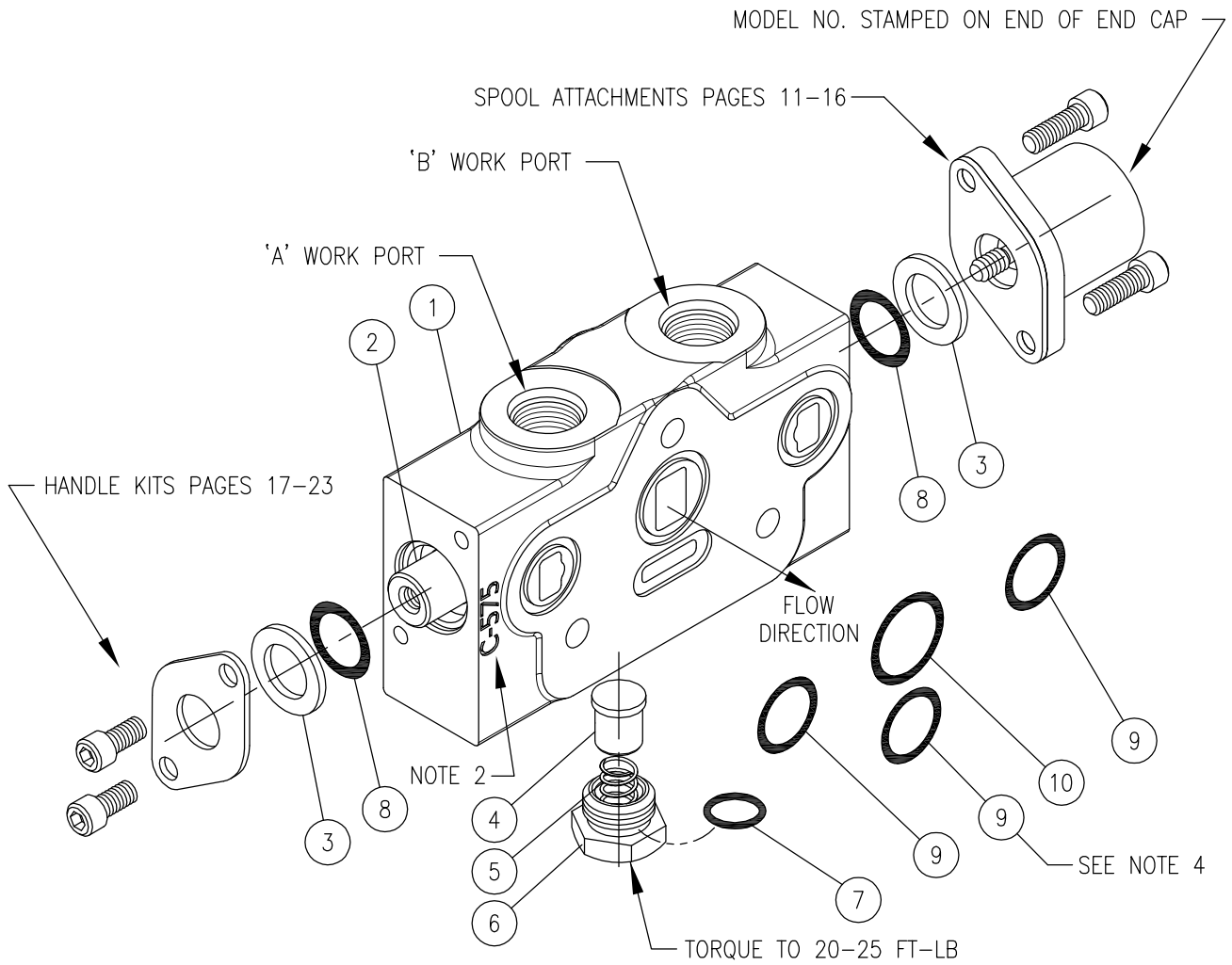

ITEM	QTY	PART NO.	DESCRIPTION
1	1		VALVE BODY } These are matched parts and are not sold seperately.
2	1	SEE NOTE 1	SPOOL } These are matched parts and are not sold seperately.
3	2	670500045	SPOOL BACKUP WASHER
4	1	670100008	LOAD CHECK POPPET } LOAD CHECK KIT, P/N 660180052
5	1	670300029	LOAD CHECK SPRING } LOAD CHECK KIT, P/N 660180052
6	1	671600049	LOAD CHECK PLUG } LOAD CHECK KIT, P/N 660180052
7	1	240000908	–908 O–RING } LOAD CHECK KIT, P/N 660180052
8	2	240000208	–208 O–RING } SVW REPLACEMENT SEAL KIT, P/N 660580001
9	3	240000018	–018 O–RING } REPLACEMENT SEAL KIT; P\N 660580004 } SVW REPLACEMENT SEAL KIT, P/N 660580001
10	1	240000021	–021 O–RING } REPLACEMENT SEAL KIT; P\N 660580004 } SVW REPLACEMENT SEAL KIT, P/N 660580001

NOTES:
1. SEE SPOOL IDENTIFICATION CHART ON PAGE 9
2. 'C–575' CAST ON SIDE OF BODY INDICATES AN SVW WORK SECTION BODY.
3. 3–WAY SECTIONS, SPOOL OPTION 'A', HAVE A STEEL PLUG INSTALLED IN THE 'A' WORK PORT.
4. THIS O–RING GOES INTO THE OVAL COUNTERBORE IN THE SIDE OF THE VALVE BODY.

SVH PORT RELIEF WORK SECTION

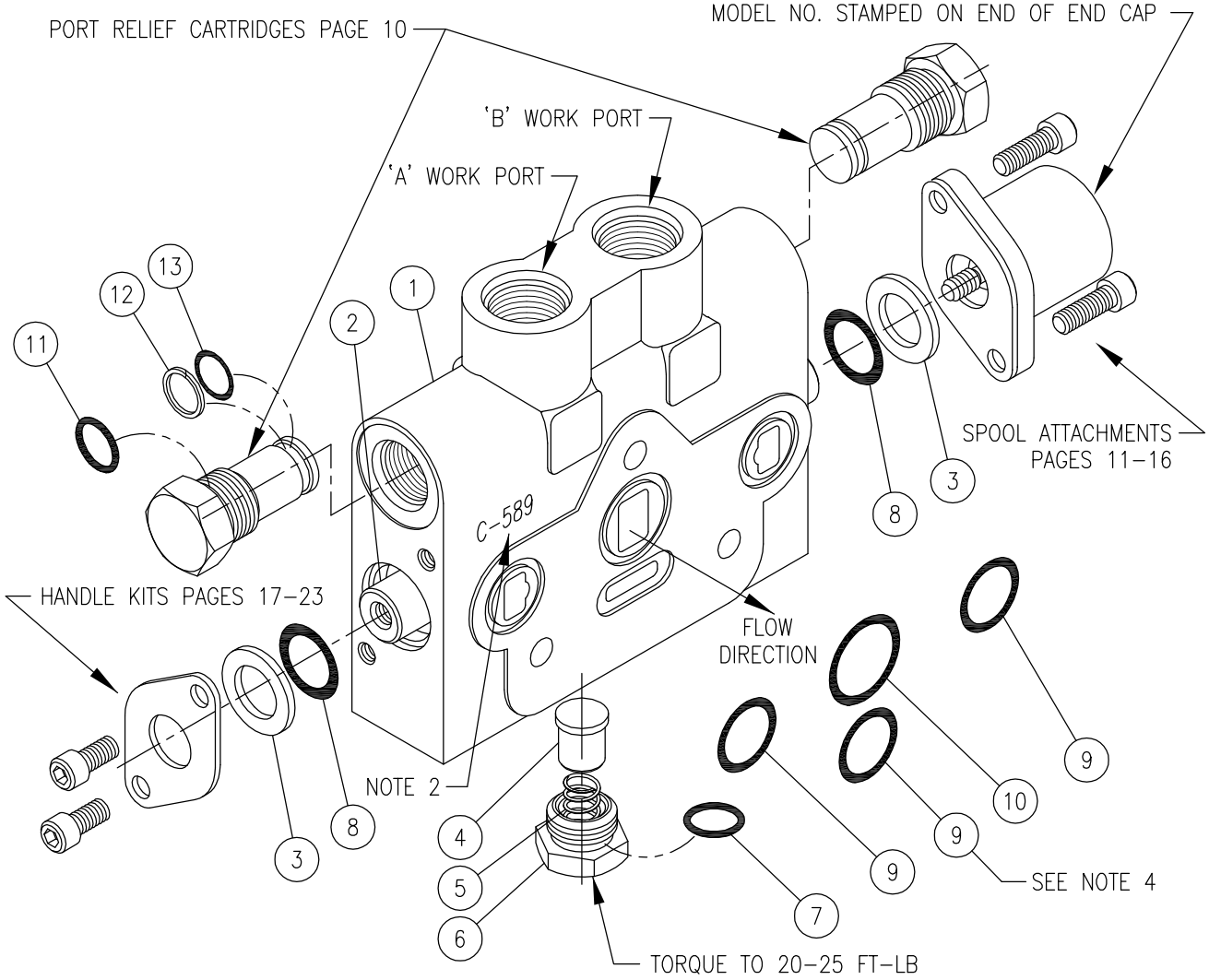

ITEM	QTY	PART NO.	DESCRIPTION
1	1		VALVE BODY } These are matched parts and are not sold seperately.
2	1	SEE NOTE 1	SPOOL } These are matched parts and are not sold seperately.
3	2	670500045	SPOOL BACKUP WASHER
4	1	670100008	LOAD CHECK POPPET } LOAD CHECK KIT, P/N 660180052
5	1	670300029	SPRING } LOAD CHECK KIT, P/N 660180052
6	1	671600049	LOAD CHECK PLUG } LOAD CHECK KIT, P/N 660180052
7	1	240000908	908 O–RING } LOAD CHECK KIT, P/N 660180052
8	2	240000208	208 O–RING } SVH REPLACEMENT SEAL KIT, P/N 660580010
9	3	240000018	018 O–RING } REPLACEMENT SEAL KIT, P/N 660580004 } SVH REPLACEMENT SEAL KIT, P/N 660580010
10	1	240000021	021 O–RING } REPLACEMENT SEAL KIT, P/N 660580004 } SVH REPLACEMENT SEAL KIT, P/N 660580010
11	2	240000908	908 O–RING } SVH REPLACEMENT SEAL KIT, P/N 660580010
12	2	240019014	BACK–UP WASHER } SVH REPLACEMENT SEAL KIT, P/N 660580010
13	2	240000014	014 O–RING } SVH REPLACEMENT SEAL KIT, P/N 660580010

NOTES:
1. SEE SPOOL IDENTIFICATION CHART ON PAGE 9
2. 'C–589' CAST ON SIDE OF BODY INDICATES AN SVH PORT RELIEF WORK SECTION BODY.
3. 3–WAY SECTIONS, SPOOL OPTION 'A', HAVE A STEEL PLUG INSTALLED IN 'A' WORK PORT.
4. THIS O–RING GOES INTO THE OVAL COUNTERBORE IN THE SIDE OF THE VALVE BODY.

SVL LOCK VALVE WORK SECTION

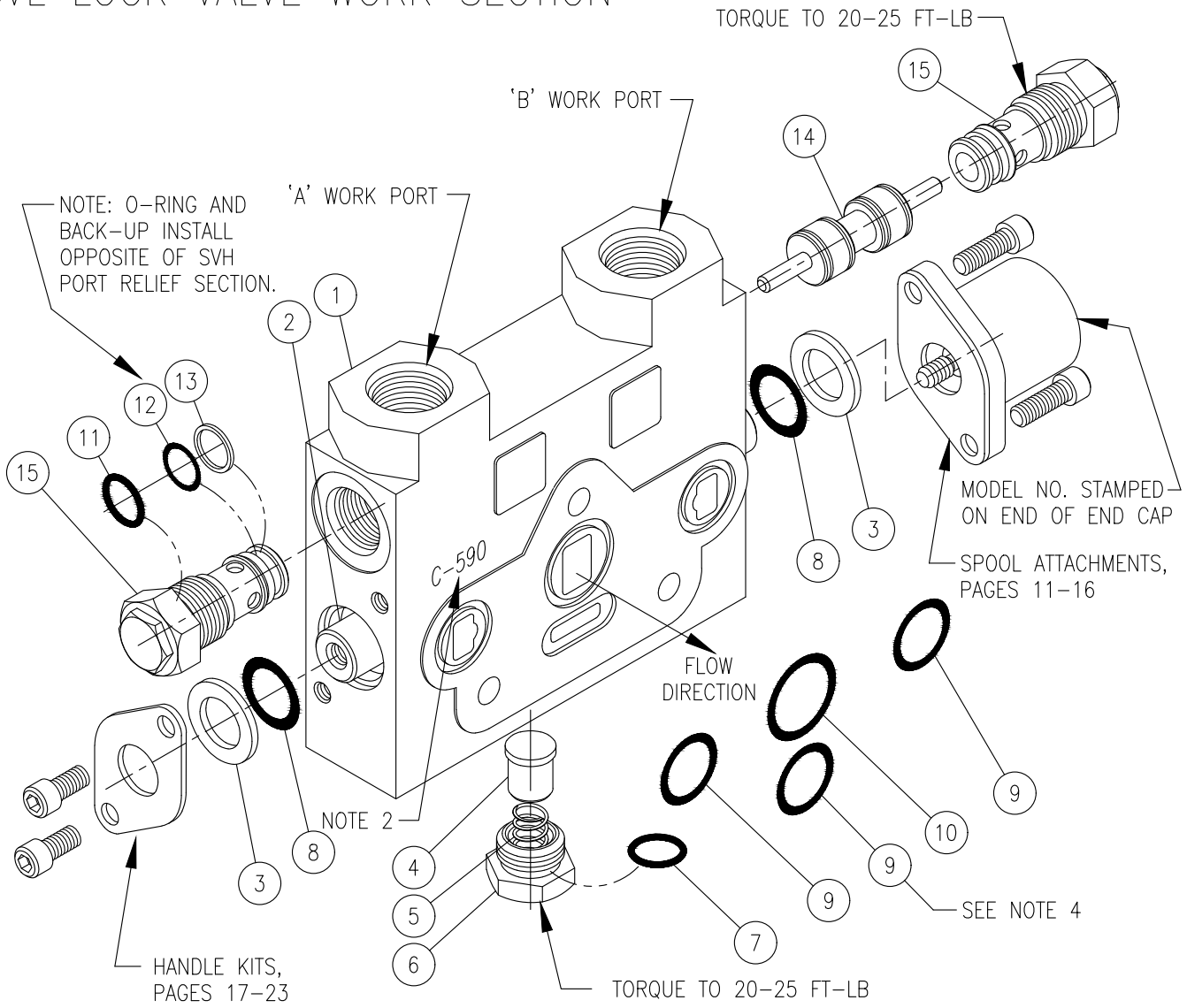

ITEM	QTY	PART NO.	DESCRIPTION
1	1	–	VALVE BODY } These are matched parts and are not sold separately.
2	1	SEE NOTE 1	SPOOL } These are matched parts and are not sold separately.
3	2	670500045	SPOOL BACKUP WASHER
4	1	670100008	LOAD CHECK POPPET } LOAD CHECK KIT, P/N 660180052
5	1	670300029	LOAD CHECK SPRING } LOAD CHECK KIT, P/N 660180052
6	1	671600049	LOAD CHECK PLUG } LOAD CHECK KIT, P/N 660180052
7	1	240000908	-908 O-RING } LOAD CHECK KIT, P/N 660180052
8	2	240000208	-208 O-RING } SVL REPLACEMENT SEAL KIT, P/N 660580009
9	3	240000018	-018 O-RING } REPLACEMENT SEAL KIT, P/N 660580004 } SVL REPLACEMENT SEAL KIT, P/N 660580009
10	1	240000021	-021 O-RING } REPLACEMENT SEAL KIT, P/N 660580004 } SVL REPLACEMENT SEAL KIT, P/N 660580009
11	2	240000908	-908 O-RING } SVL REPLACEMENT SEAL KIT, P/N 660580009
12	2	240000014	-014 O-RING } SVL REPLACEMENT SEAL KIT, P/N 660580009
13	2	240016622	BACK-UP WASHER } SVL REPLACEMENT SEAL KIT, P/N 660580009
14	1	–	SHUTTLE SPOOL (Matched part not sold separately)
15	2	660280070	LOCK VALVE CARTRIDGE

NOTES:
1. SEE SPOOL IDENTIFICATION CHART ON PAGE 9.
2. 'C-590' CAST ON SIDE OF BODY INDICATES AN SVL LOCK VALVE WORK SECTION BODY.
3. THIS SECTION USES SAME SPOOL ATTACHMENTS AND HANDLE OPTIONS AS SVW.
4. THIS O-RING GOES INTO THE OVAL COUNTERBORE IN THE SIDE OF THE VALVE BODY.

SVS SERIES WORK SECTION

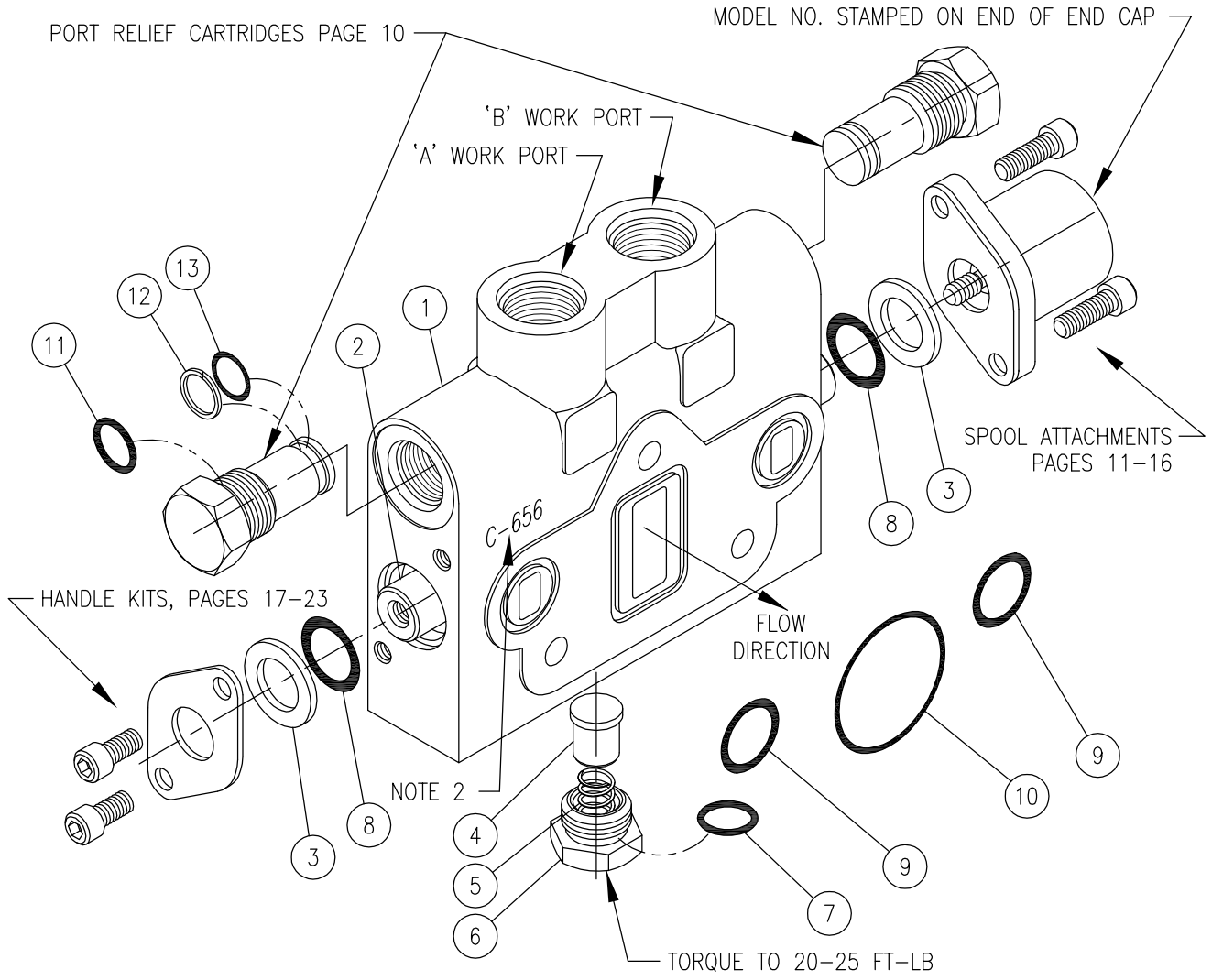

ITEM	QTY	PART NO.	DESCRIPTION
1	1		VALVE BODY } These are matched parts and are not sold seperately.
2	1	SEE NOTE 1	SPOOL } These are matched parts and are not sold seperately.
3	2	670500045	SPOOL BACKUP WASHER
4	1	670100008	LOAD CHECK POPPET } LOAD CHECK KIT, P/N 660180052
5	1	670300029	LOAD CHECK SPRING } LOAD CHECK KIT, P/N 660180052
6	1	671600049	LOAD CHECK PLUG } LOAD CHECK KIT, P/N 660180052
7	1	240000908	–908 O–RING } LOAD CHECK KIT, P/N 660180052
8	2	240000208	–208 O–RING } SVS REPLACEMENT SEAL KIT, P/N 660580011
9	2	240000018	–018 O–RING } REPLACEMENT SEAL KIT, P/N 660580006 } SVS REPLACEMENT SEAL KIT, P/N 660580011
10	1	240000029	–029 O–RING } REPLACEMENT SEAL KIT, P/N 660580006 } SVS REPLACEMENT SEAL KIT, P/N 660580011
11	2	240000908	–908 O–RING } SVS REPLACEMENT SEAL KIT, P/N 660580011
12	2	240019014	BACK–UP WASHER } SVS REPLACEMENT SEAL KIT, P/N 660580011
13	2	240000014	–014 O–RING } SVS REPLACEMENT SEAL KIT, P/N 660580011

NOTES:
1. SEE SPOOL IDENTIFICATION CHART ON PAGE 9
2. 'C–656' CAST ON SIDE OF BODY INDICATES A SERIES–TYPE PORT RELIEF WORK SECTION BODY.
3. THE SVS SERIES WORK SECTION CAN NOT BE USED IN A CLOSED CENTER APPLICATION. SEE CATALOG FOR APPLICATION INFORMATION.

SVM METERING WORK SECTION
SVF FINE METERING WORK SECTION

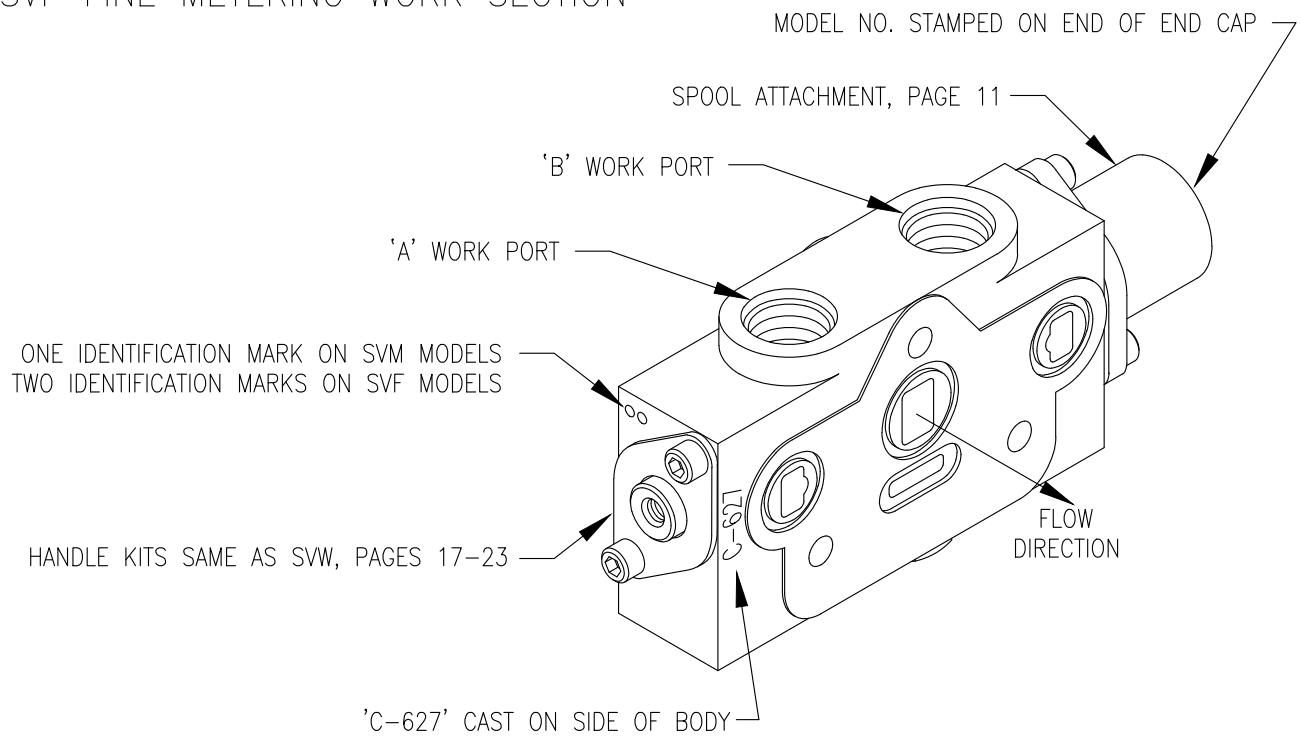

LOAD CHECK AND SEAL KITS SAME AS SVW;
SEE PAGE 4 FOR TYPICAL EXPLODED VIEW.

SVR METERING PORT RELIEF WORK SECTION
SVG FINE METERING PORT RELIEF WORK SECTION

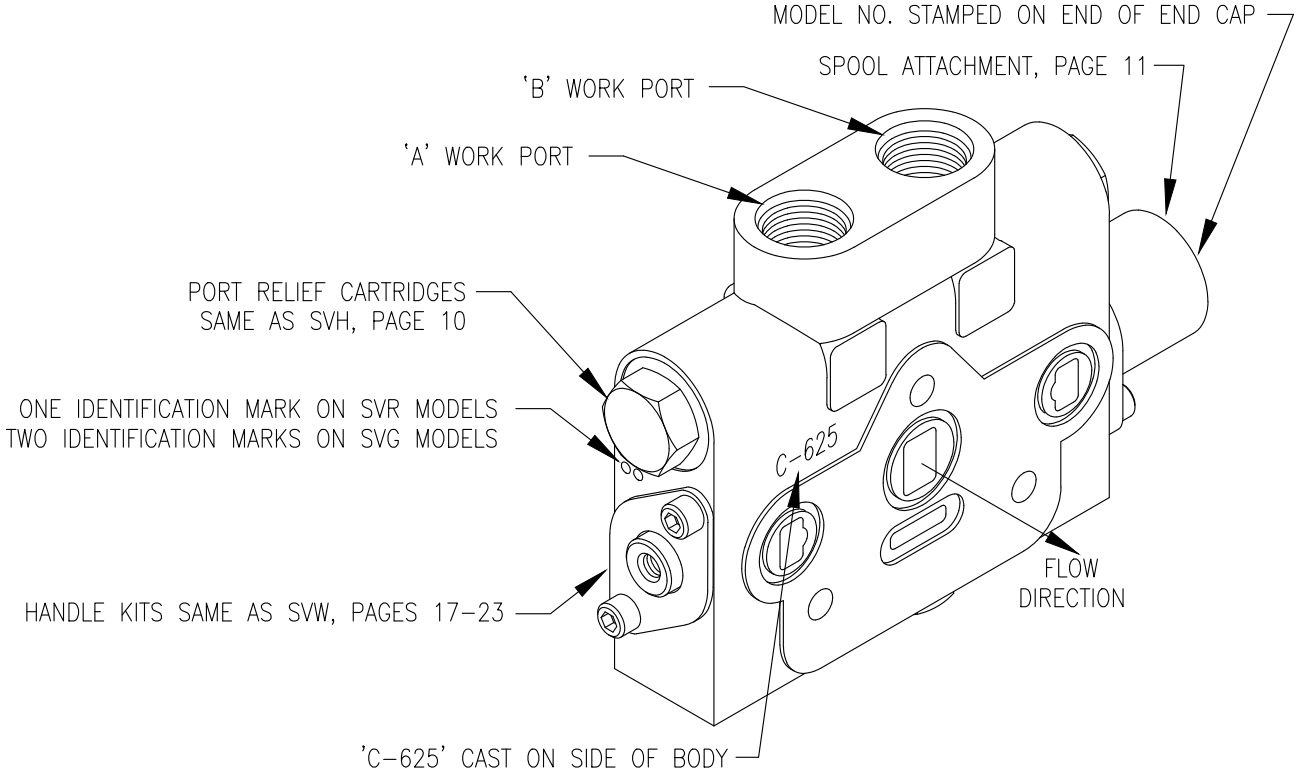

LOAD CHECK AND SEAL KITS SAME AS SVH;
SEE PAGE 5 FOR TYPICAL EXPLODED VIEW.

SV SPOOL IDENTIFICATION

OPTION 'A', WORK SECTION SVW AND SVH, 3 WAY 3 POSITION, WORK PORT BLOCKED IN NEUTRAL, 'A' PORT PLUGGED

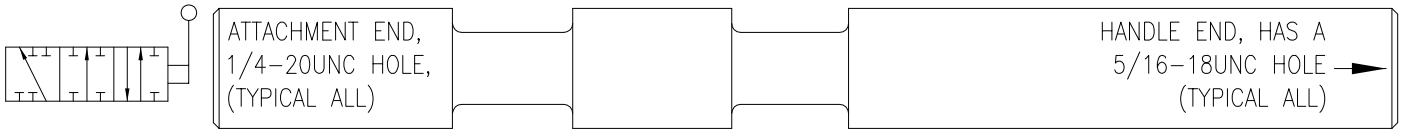

OPTION 'B', WORK SECTION SVW AND SVH, 4 WAY 3 POSITION TANDEM CENTER, WORK PORTS BLOCKED IN NEUTRAL

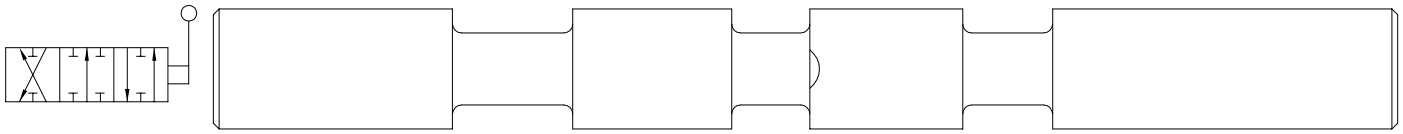

OPTION 'C', WORK SECTION SVW, SVH AND SVL, 4 WAY 3 POSITION MOTOR, WORK PORTS OPEN IN NEUTRAL

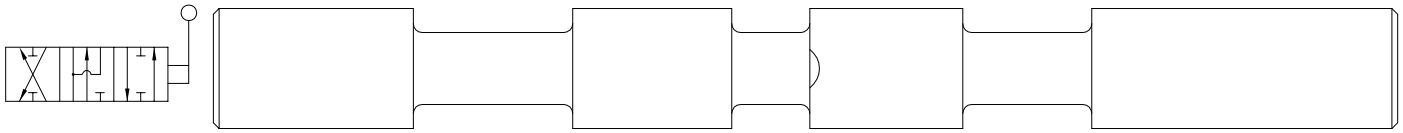

OPTION 'D', WORK SECTION SVW AND SVH, 4 WAY 4 POSITION TANDEM CENTER FLOAT, WORK PORTS BLOCKED IN NEUTRAL

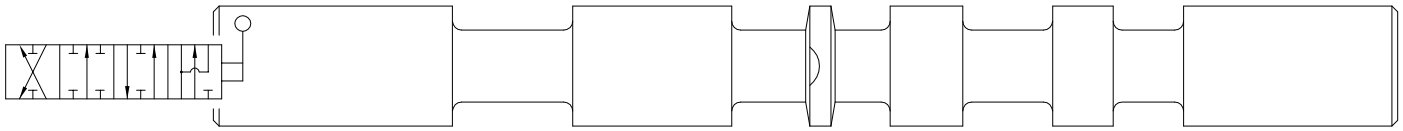

OPTION 'E', WORK SECTION SVM AND SVR, 4 WAY 3 POSITION TANDEM CENTER METERING, WORK PORTS BLOCKED IN NEUTRAL

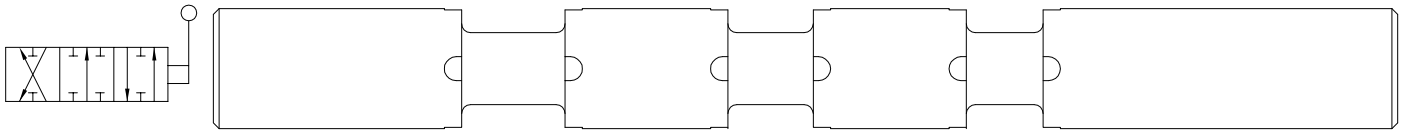

OPTION 'F', WORK SECTION SVM AND SVR, 3 WAY 3 POSITION METERING, WORK PORT BLOCKED IN NEUTRAL

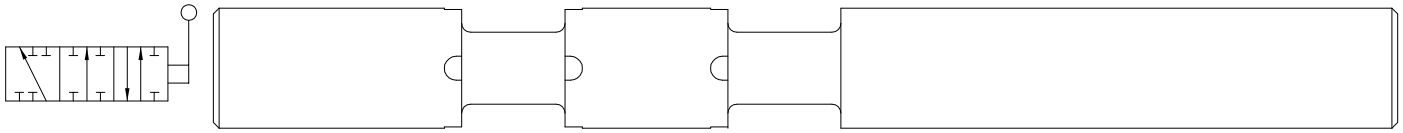

OPTION 'G', WORK SECTION SVS, 4 WAY 3 POSITION SERIES, WORK PORTS BLOCKED IN NEUTRAL

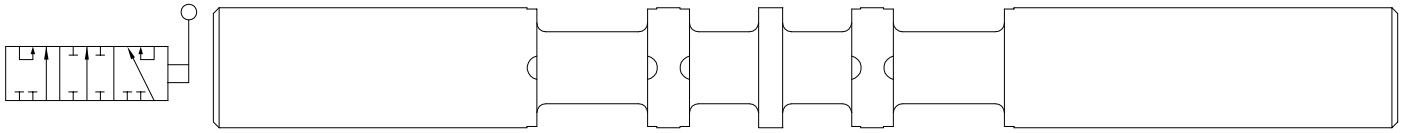

OPTION 'H', WORK SECTION SVS, 4 WAY 3 POSITION SERIES MOTOR, WORK PORTS OPEN IN NEUTRAL

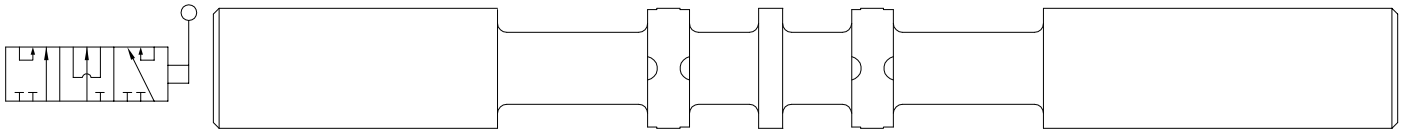

OPTION 'J', WORK SECTION SVF AND SVG, 4 WAY 3 POSITION FINE METERING, WORK PORTS BLOCKED IN NEUTRAL

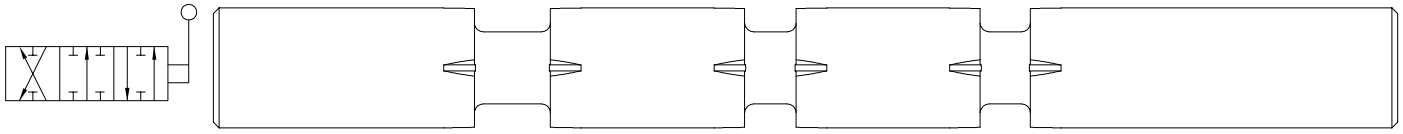

NOTE: SPOOLS ARE NOT AVAILABLE AS REPAIR PARTS. THIS INFORMATION IS FOR IDENTIFICATION PURPOSES.

'SV' PORT RELIEF CARTRIDGES

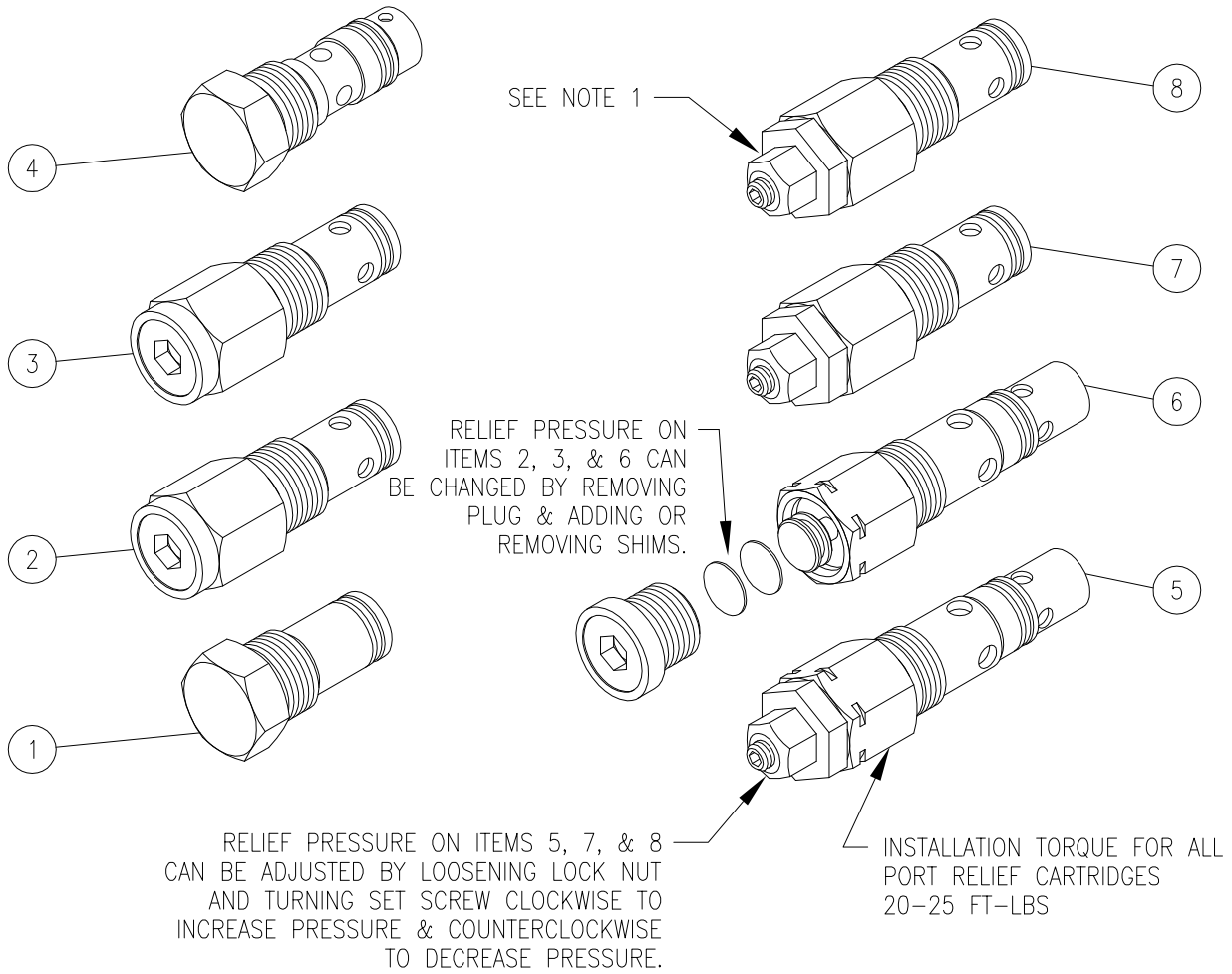

WARNING: OVERPRESSURE MAY CAUSE SUDDEN AND UNEXPECTED FAILURE OF A COMPONENT IN THE HYDRAULIC SYSTEM RESULTING IN SERIOUS PERSONAL INJURY. ALWAYS USE A GAUGE WHEN ADJUSTING A RELIEF VALVE.

ITEM	PART NO.	DESCRIPTION
1	660280004	RELIEF PLUG (OPTION A)
2	660280003 *	SHIM ADJUSTABLE DIRECT ACTING RELIEF 1500–3000 PSI (OPTION B)
3	660280010 *	SHIM ADJUSTABLE DIRECT ACTING RELIEF 500–1500 PSI (OPTION C)
4	660280005 *	ANTI–CAVITATION CHECK (OPTION D)
5	660280012 *	ADJUSTABLE COMBINATION PORT RELIEF/ANTI–CAVITATION CHECK 1000–2500 PSI (OPTION E) SEE NOTE 2
6	660280008 *	SHIM ADJUSTABLE COMBINATION PORT RELIEF/ANTI–CAVITATION CHECK 1000–2500 PSI (OPTION F) SEE NOTE 2
7	660280009 *	ADJUSTABLE DIRECT ACTING RELIEF 1500–3000 PSI (OPTION G)
8	660280011 *	ADJUSTABLE DIRECT ACTING RELIEF 500–1500 PSI (OPTION H)
	672000101	.015 SHIM
	672000102	.033 SHIM
	672000103	.060 SHIM
	660180215	SHIM ASSORTMENT
	660580022	SEAL KIT, ALL CARTRIDGES

* NOTE: PART NUMBERS LISTED ABOVE ARE NOT PRESET. PORT RELIEF CARTRIDGE OPTIONS B, C, G & H CAN BE ORDERED PRESET TO A SPECIFIC PRESSURE, SEE 'PR–0xx' ORDER CODE IN CATALOG.

NOTES:

1) ADJUSTABLE CARTRIDGES (ITEMS 5, 7 & 8) ARE NOT NORMALLY USED ON WORK SECTIONS WITH FLOAT OPTION AND LEVER HANDLE DUE TO INTERFERENCE WITH HANDLE. THEY ALSO CANNOT BE USED IN 'T' STYLE SOLENOID SECTIONS, AND THE 'B' WORK PORT OF 'S' STYLE SOLENOID SECTIONS.
2) DO NOT USE OPTION E OR F (ITEMS 5 OR 6) IN APPLICATIONS THAT REQUIRE LOW WORK PORT LEAKAGE. MAXIMUM ALLOWABLE WORK PORT LEAKAGE FOR THESE TWO OPTIONS ONLY 6 IN^3/MIN @ 1000 PSI.

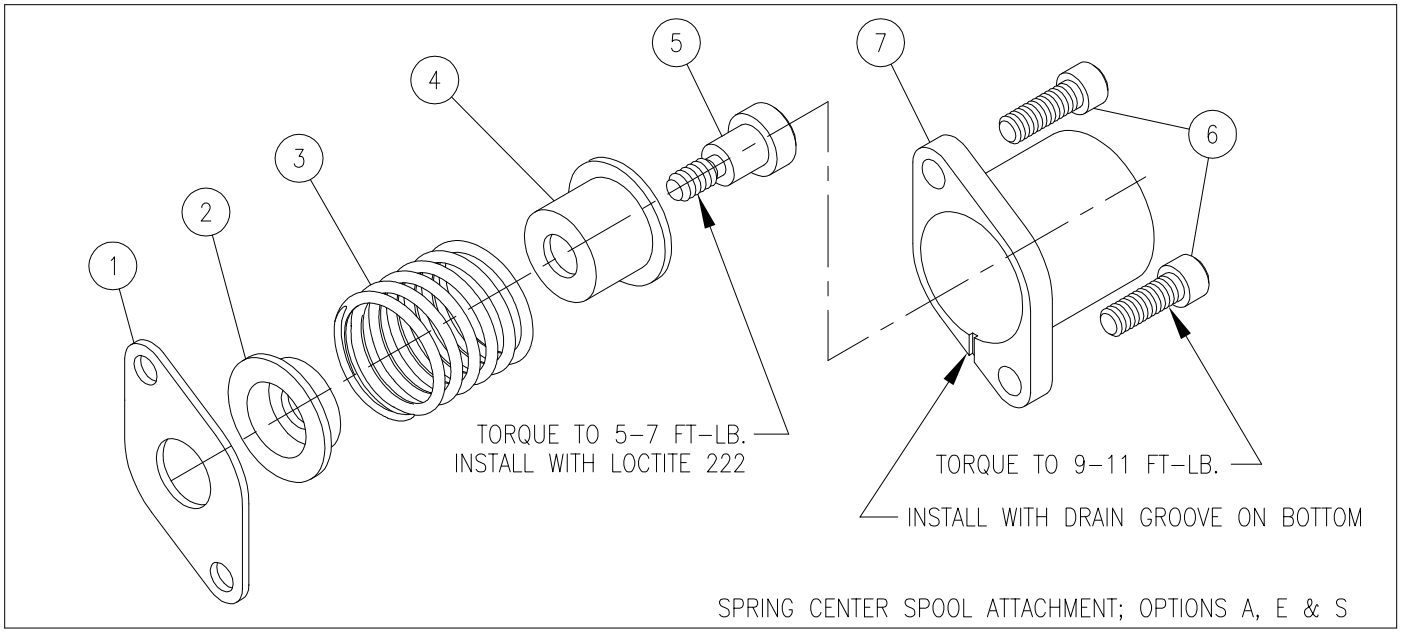

SVW, SVH, SVL, & SVS SPRING CENTER SPOOL ATTACHMENT (OPTION A*)

ITEM	QTY	PART NO.	DESCRIPTION		
1	1	670500044	RETAINER PLATE		SPRING CENTER KIT, P/N 660180135 *
2	1	671400037	INNER STOP CUP	CONVERSION KIT, P/N 660180001	
3	1	670300030 *	SPRING, CENTERING *		
4	1	671400036	OUTER STOP CUP		
5	1	671900010	ADAPTER, SPOOL		
6	2	170003008	CAP SCREW		
7	1	671400033	END CAP		

SVW, SVH, SVL, & SVS LIGHT SPRING CENTER SPOOL ATTACHMENT (OPTION E*)

ITEM	QTY	PART NO.	DESCRIPTION	
1	1	670500044	RETAINER PLATE	SPRING CENTER KIT, P\N 660180138 *
2	1	671400037	INNER STOP CUP	
3	1	670300036 *	SPRING, LIGHT CENTERING *	
4	1	671400036	OUTER STOP CUP	
5	1	671900010	ADAPTER, SPOOL	
6	2	170003008	CAP SCREW	
7	1	671400033	END CAP	

* STD. CENTERING SPRING IN ABOVE CAN BE REPLACED BY MEDIUM HEAVY SPRING 670300031 (COMPL. KIT #660180085).

SVM AND SVR SPRING CENTER SPOOL ATTACHMENT (OPTION S)

ITEM	QTY	PART NO.	DESCRIPTION	
1	1	670500044	RETAINER PLATE	SPRING CENTER KIT, P/N 660180070
2	1	671400037	INNER STOP CUP	
3	1	670300030	SPRING, CENTERING	
4	1	671400075	OUTER STOP CUP (BLACK)	
5	1	671900031	ADAPTER, SPOOL (BLACK)	
6	2	170003008	CAP SCREW	
7	1	671400033	END CAP	

SVF AND SVG SPRING CENTER SPOOL ATTACHMENT (OPTION S)

ITEM	QTY	PART NO.	DESCRIPTION
1	1	670500044	RETAINER PLATE
2	1	671400037	INNER STOP CUP
3	1	670300031	SPRING, CENTERING
4	1	671400075	OUTER STOP CUP (BLACK)
5	1	671900031	ADAPTER, SPOOL (BLACK)
6	2	170003008	CAP SCREW
7	1	671400033	END CAP

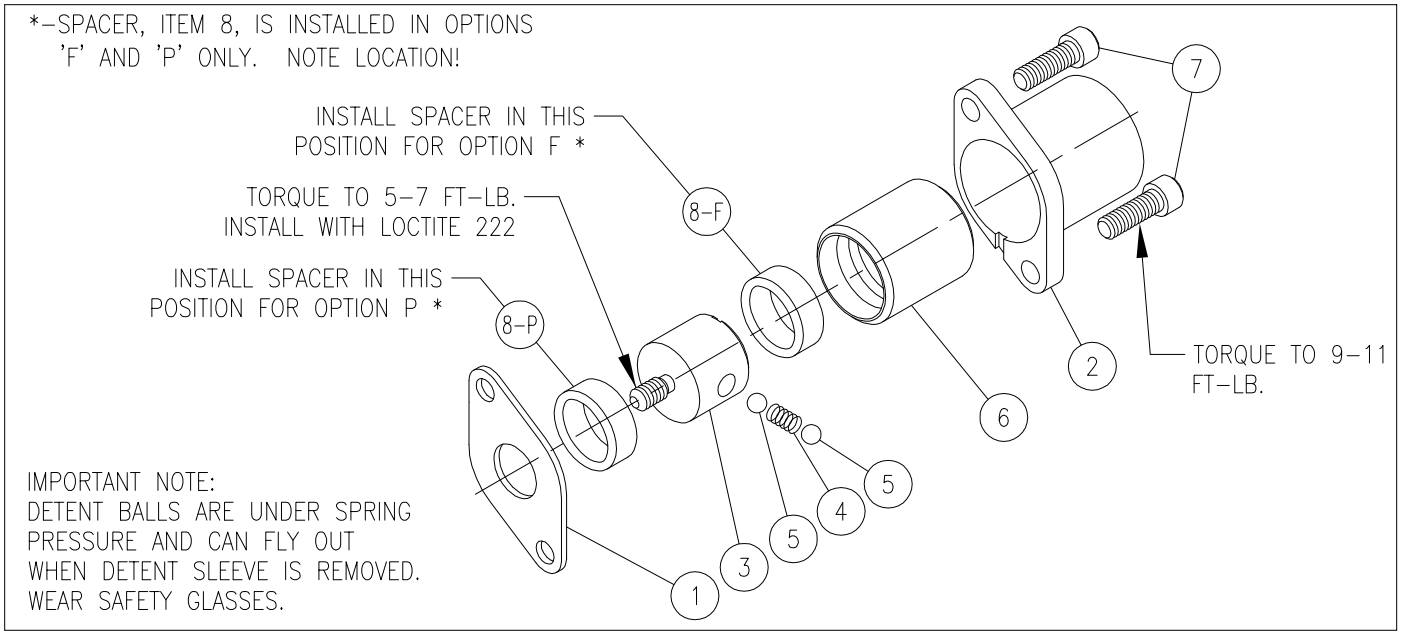

3 POSITION DETENT SPOOL ATTACHMENT (OPTION B)

ITEM	QTY	PART NO.	DESCRIPTION		
1	1	670500044	RETAINER PLATE		3–POSITION DETENT KIT, P/N 660180136
2	1	671400033	END CAP		
3	1	670700035	DETENT RETAINER	CONVERSION KIT, P/N 660180002	
4	1	670300025	SPRING, DETENT		
5	2	230009009	STEEL BALL		
6	1	670700034	DETENT SLEEVE		
7	2	170003008	CAP SCREW		

1 POSITION DETENT SPOOL ATTACHMENT (OPTION C)

ITEM	QTY	PART NO.	DESCRIPTION		
1	1	670500044	RETAINER PLATE		1 POSITION DETENT KIT, P/N 660180137
2	1	671400033	END CAP		
3	1	670700035	DETENT RETAINER	CONVERSION KIT, P/N 660180003	
4	1	670300025	SPRING, DETENT		
5	2	230009009	STEEL BALL		
6	1	670700033	DETENT SLEEVE		
7	2	170003008	CAP SCREW		

2 POS. DETENT (NEUTRAL/OUT) SPOOL ATTACHMENT (OPTION F)
2 POS. DETENT (NEUTRAL/IN) SPOOL ATTACHMENT (OPTION P)

ITEM	QTY	PART NO.	DESCRIPTION	
1	1	670500044	RETAINER PLATE	2 POSITION DETENT KIT; OPTION F – P/N 660180139 OPTION P – P/N 660180152
2	1	671400033	END CAP	
3	1	670700035	DETENT RETAINER	
4	1	670300025	SPRING, DETENT	
5	2	230009009	STEEL BALL	
6	1	670700034	DETENT SLEEVE	
7	2	170003008	CAP SCREW	
8	1	671200011	SPACER (SEE LOCATION ABOVE)	

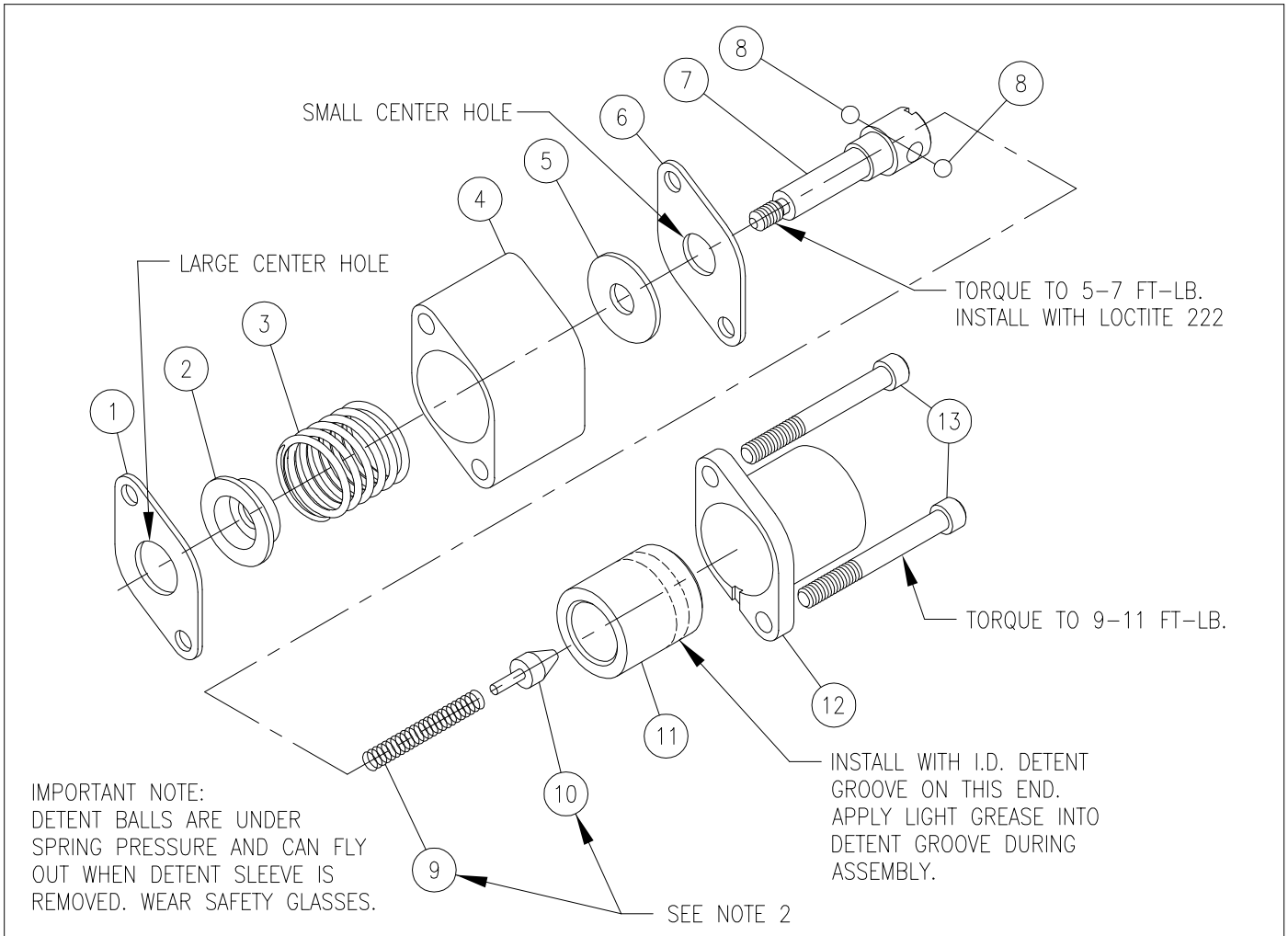

SVW & SVH SPRING CENTER FLOAT DETENT SPOOL ATTACHMENT (OPTION D)

ITEM	QTY	PART NO.	DESCRIPTION	
1	1	670500044	RETAINER PLATE	SPRING CENTER FLOAT DETENT KIT P/N 660180051
2	1	671400037	STOP CUP	
3	1	670300031	SPRING, CENTERING	
4	1	671200007	FLOAT SPACER	
5	1	670500043	WASHER	
6	1	670500048	RETAINER PLATE	
7	1	670700037	FLOAT DETENT RETAINER	
8	2	230009009	STEEL BALL	
9	1	670300032 SEE NOTE 2	SPRING, DETENT	
10	1	670100009	FLOAT DETENT POPPET	
11	1	670700036	FLOAT DETENT SLEEVE	
12	1	671400033	END CAP	
13	2	170003027	CAP SCREW	

NOTES:

1. THIS OPTION CANNOT BE ADDED IN THE FIELD. IT MUST BE USED WITH FLOAT SPOOL OPTION 'D'.
2. INSTALL ITEMS 9 & 10 INTO ITEM 7 AND COMPRESS SPRING BY PRESSING ON POPPET WITH A DOWEL. INSTALL STEEL BALLS, ITEM 8, AND SLIDE DETENT SLEEVE, ITEM 11, OVER RETAINER, ITEM 7.

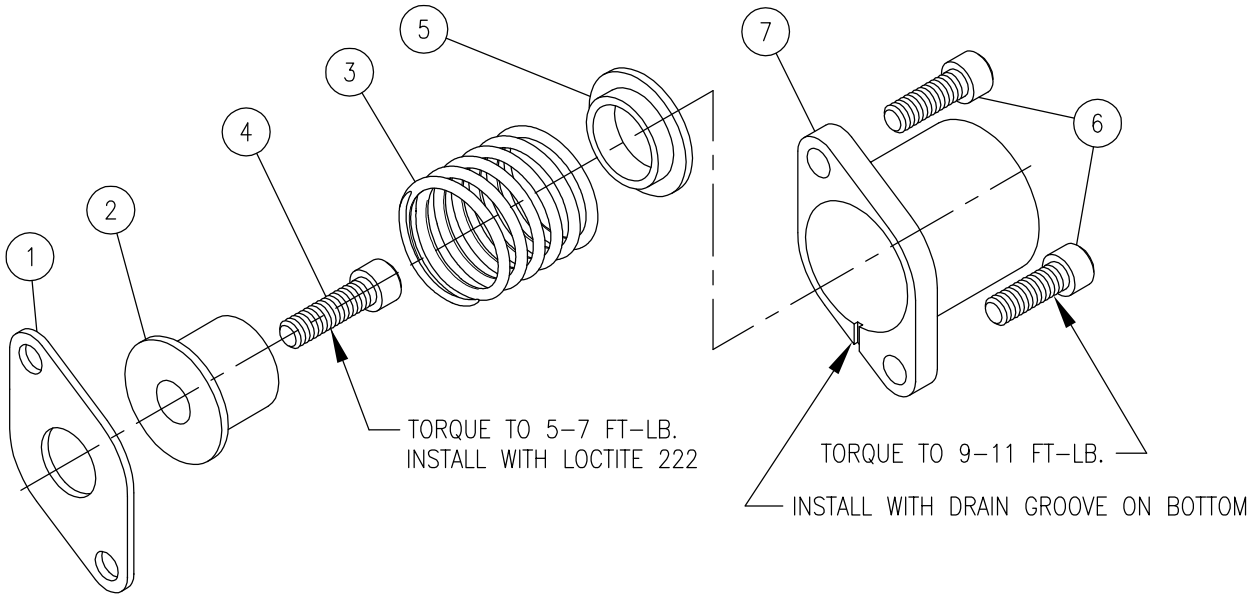

2 POSITION, SPRING OFFSET TO SPOOL OUT, SPOOL ATTACHMENT (OPTION G)

ITEM	QTY	PART NO.	DESCRIPTION	
1	1	670500044	RETAINER PLATE	2 POS. SPRING OFFSET OUT KIT, P/N 660180140
2	1	671400044	ADAPTER	
3	1	670300030	SPRING, CENTERING	
4	1	170003008	ADAPTER CAP SCREW	
5	1	671200010	SPACER	
6	2	170003008	CAP SCREW	
7	1	671400033	END CAP	

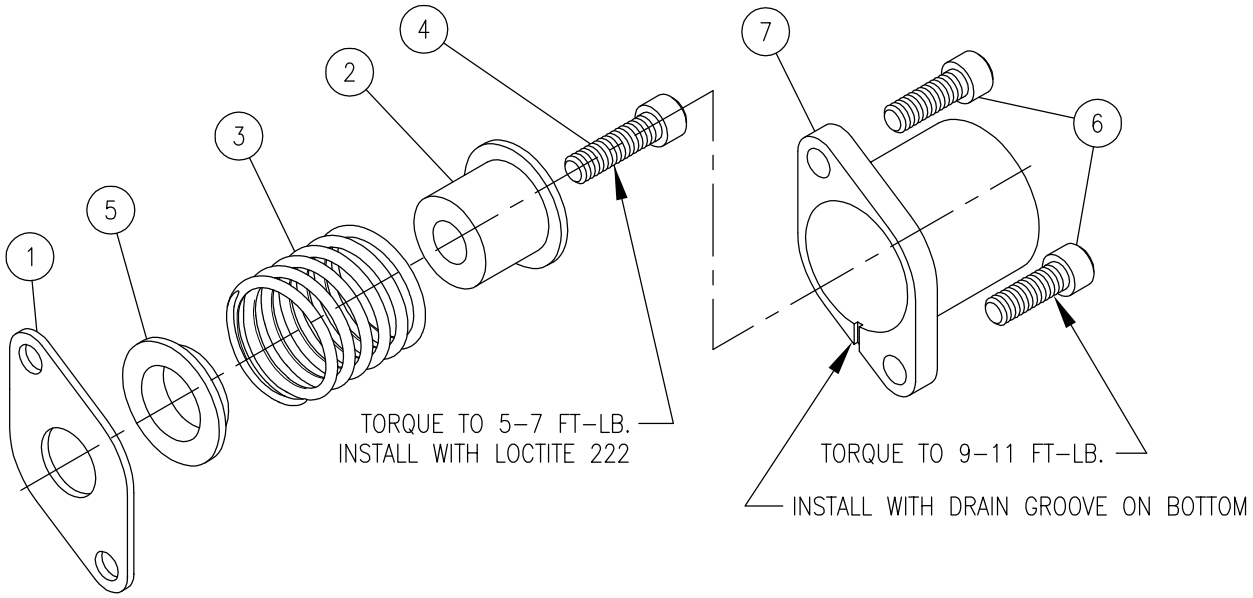

2 POSITION, SPRING OFFSET TO SPOOL IN, SPOOL ATTACHMENT (OPTION H)

ITEM	QTY	PART NO.	DESCRIPTION	
1	1	670500044	RETAINER PLATE	2 POS. SPRING OFFSET IN KIT, P/N 660180141
2	1	671400044	ADAPTER	
3	1	670300030	SPRING, CENTERING	
4	1	170003008	ADAPTER CAP SCREW	
5	1	671200010	SPACER	
6	2	170003008	CAP SCREW	
7	1	671400033	END CAP	

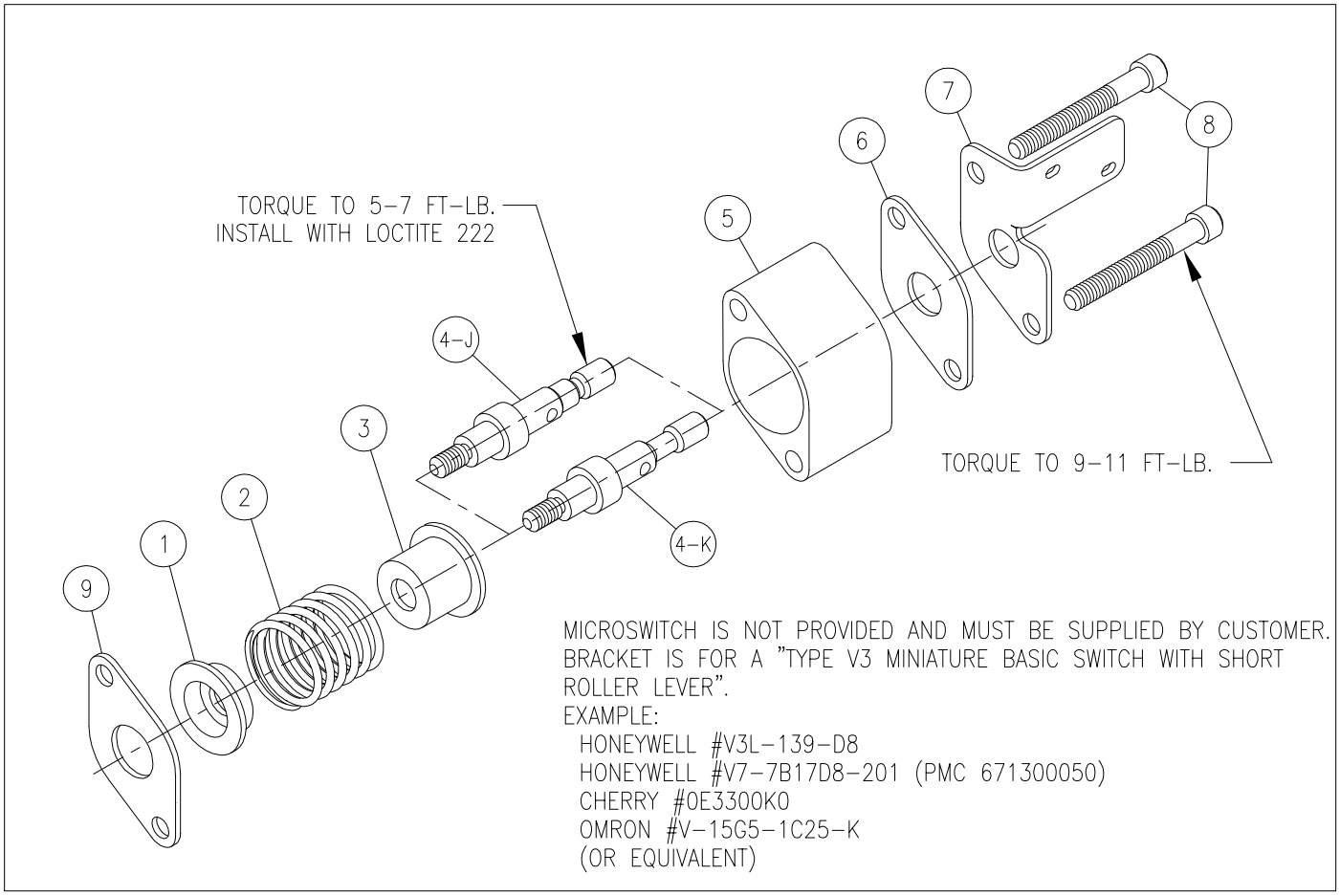

SPRING CENTER W/ MICROSWITCH BRACKET

SPRING CENTER W/ MICROSWITCH BRACKET, SWITCHED AT 2 POSITIONS (OPTION J)

ITEM	QTY	PART NO.	DESCRIPTION	
1	1	671400037	INNER STOP CUP	KIT P/N 660180015
2	1	670300030	SPRING, CENTERING	
3	1	671400036	OUTER STOP CUP	
4-J	1	671900023	SPOOL ADAPTER	
5	1	671200015	SPACER	
6	1	670500048	RETAINER PLATE	
7	1	670500051	BRACKET	
8	2	170003019	CAP SCREW	
9	1	670500044	RETAINER PLATE	
10	1	671300012	BOOT (NOT SHOWN)	

SPRING CENTER W/ MICROSWITCH BRACKET, SWITCHED AT 1 POSITION, SPOOL OUT (OPTION K)

ITEM	QTY	PART NO.	DESCRIPTION	
1	1	671400037	INNER STOP CUP	KIT P/N 660180016
2	1	670300030	SPRING, CENTERING	
3	1	671400036	OUTER STOP CUP	
4-K	1	671900026	SPOOL ADAPTER	
5	1	671200015	SPACER	
6	1	670500048	RETAINER PLATE	
7	1	670500051	BRACKET	
8	2	170003019	CAP SCREW	
9	1	670500044	RETAINER PLATE	
10	1	671300012	BOOT (NOT SHOWN)	

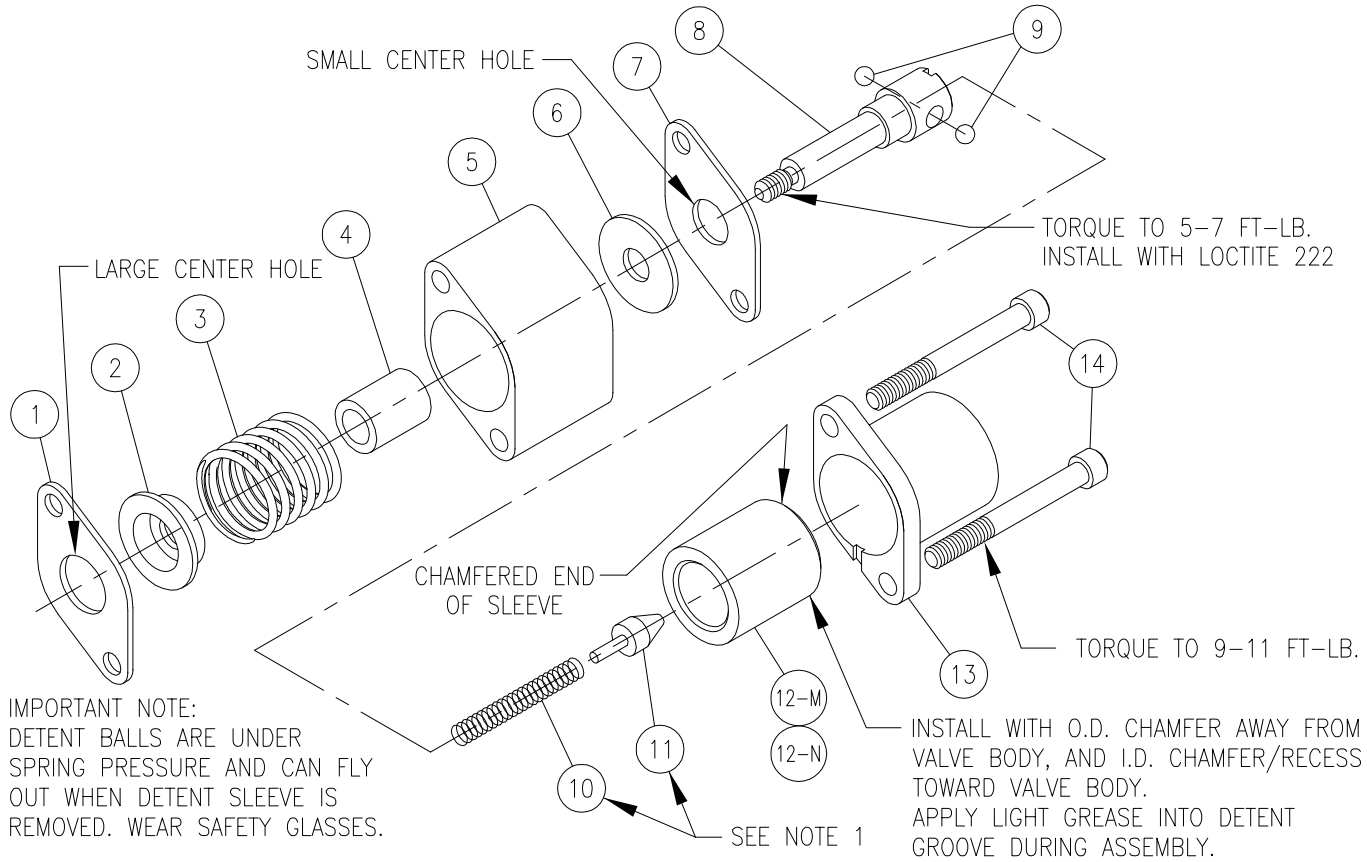

SPRING CENTER WITH DETENT IN (OPTION M) KIT NO. 660180036
SPRING CENTER WITH DETENT OUT (OPTION N) KIT NO. 660180037

ITEM	QTY	PART NO.	DESCRIPTION
1	1	670500044	RETAINER PLATE
2	1	671400037	STOP CUP
3	1	670300031	SPRING, CENTERING
4	1	671200016	STOP RING
5	1	671200007	FLOAT SPACER
6	1	670500043	WASHER
7	1	670500048	RETAINER PLATE
8	1	670700037	FLOAT DETENT RETAINER
9	2	230009009	STEEL BALL
10	1	670300032	SPRING, DETENT
11	1	670100009	FLOAT DETENT POPPET
12-M	1	670700038	DETENT SLEEVE (DETENT IN, OPTION M ONLY)
12-N	1	670700045	DETENT SLEEVE (DETENT OUT, OPTION N ONLY)
13	1	671400033	END CAP
14	2	170003027	CAP SCREW

NOTES:
1. INSTALL ITEMS 10 & 11 INTO ITEM 8 AND COMPRESS SPRING. INSTALL STEEL BALLS, ITEM 9, AND SLIDE DETENT SLEEVE, ITEM 12, OVER RETAINER, ITEM 8. ORIENT DETENT SLEEVE AS SHOWN ABOVE.

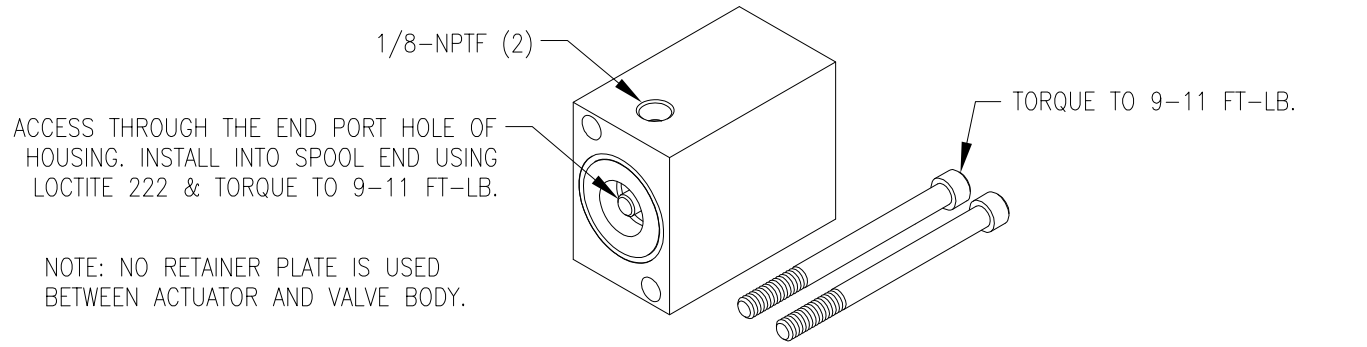

SPRING CENTER PNEUMATIC ACTUATOR (OPTION R) KIT NO. 660180197

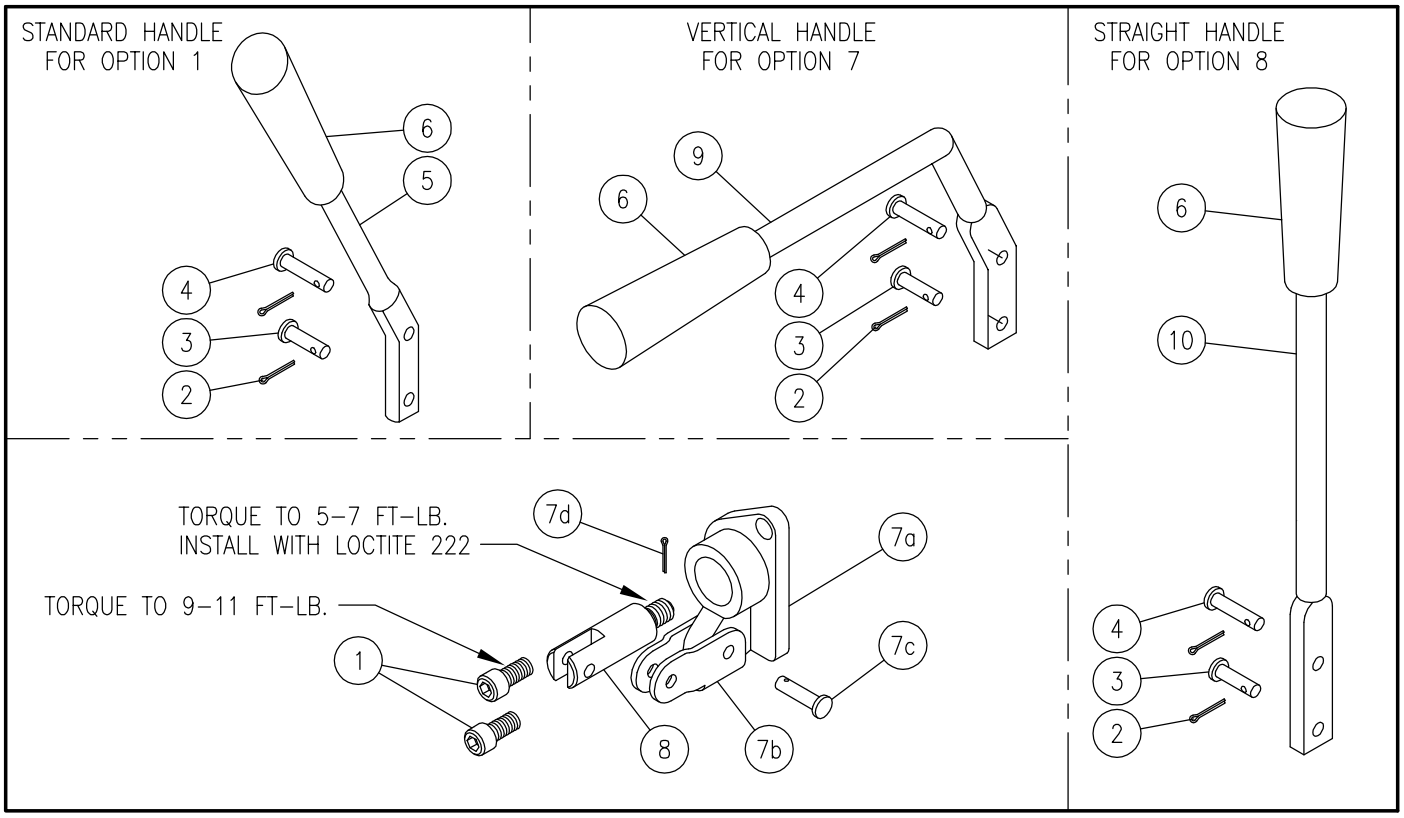

STANDARD LEVER HANDLE (OPTION 1)

ITEM	QTY	PART NO.	DESCRIPTION		
1	2	170003017	CAP SCREW		HANDLE KIT 660180004 CONTAINS ITEMS 2 THRU 6, AND ITEMS 7b THRU 7d.
2	2	220001512	COTTER PIN	STANDARD HANDLE KIT P/N 660180011	
3	1	671700012	CLEVIS PIN		
4	1	671700014	CLEVIS PIN		
5	1	670400012	HANDLE		COMPLETE STANDARD HANDLE KIT P/N 660180005 (SVH FLOAT SECT'S USE 660180226)
6	1	670400020	HANDLE KNOB		
7a	1	671400040	CLEVIS	* CLEVIS SUB–ASSY KIT P/N 660180032	
7b	1	670500047	LINK		
7c	1	671700014	CLEVIS PIN		SHORT HANDLE KIT 660180087: CONTAINS ITEMS 2–4, ITEM 6, & 2" SHORTER HANDLE 670400064
7d	1	220001512	COTTER PIN		
8	1	671900011	SPOOL ADAPTER		

VERTICAL LEVER HANDLE (OPTION 7)

ITEM	QTY	PART NO.	DESCRIPTION		
1	2	170003017	CAP SCREW		
2	2	220001512	COTTER PIN	VERTICAL HANDLE KIT KIT P/N 660180026	COMPLETE VERTICAL HANDLE KIT P/N 660180146 (SVH FLOAT SECT'S USE 660180227)
3	1	671700012	CLEVIS PIN		
4	1	671700014	CLEVIS PIN		
9	1	670400028	HANDLE		
6	1	670400020	HANDLE KNOB		
7	1	660180032	CLEVIS SUB–ASSY *		
8	1	671900011	SPOOL ADAPTER		

STRAIGHT LEVER HANDLE (OPTION 8) LIMITED USAGE DUE TO INTERFERENCE WITH PORT RELIEF CARTRIDGES

ITEM	QTY	PART NO.	DESCRIPTION		
1	2	170003017	CAP SCREW		
2	2	220001512	COTTER PIN	STRAIGHT HANDLE KIT P/N 660180028	COMPLETE STRAIGHT HANDLE KIT P/N 660180147
3	1	671700012	CLEVIS PIN		
4	1	671700014	CLEVIS PIN		
10	1	670400018	HANDLE		
6	1	670400020	HANDLE KNOB		
7	1	660180032	CLEVIS SUB–ASSY *		
8	1	671900011	SPOOL ADAPTER		

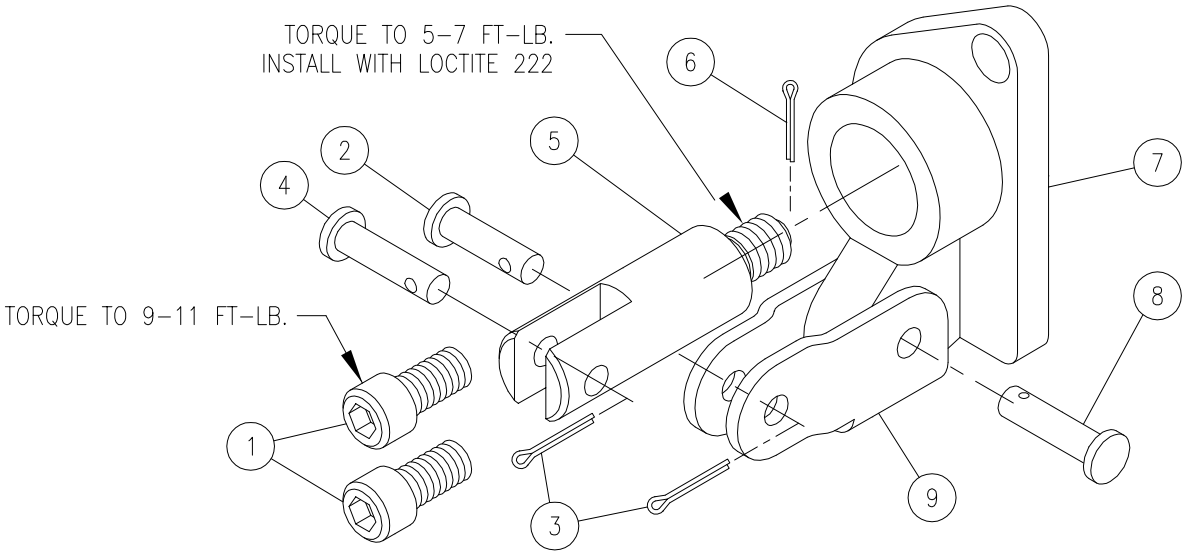

LESS HANDLE ONLY (HANDLE OPTION 2)

ITEM	QTY	PART NO.	DESCRIPTION		
1	2	170003017	CAP SCREW		COMPLETE KIT P/N 660180142
2	1	671700012	CLEVIS PIN	PIN KIT, P/N 660180031	
3	2	220001512	COTTER PIN		
4	1	671700014	CLEVIS PIN		
5	1	671900011	SPOOL ADAPTER		
6	1	220001512	COTTER PIN	CLEVIS SUB-ASSY P/N 660180032	
7	1	671400040	CLEVIS		
8	1	671700014	CLEVIS PIN		
9	1	670500047	CLEVIS LINK		

LESS COMPLETE HANDLE (HANDLE OPTION 3) KIT P/N 660180143

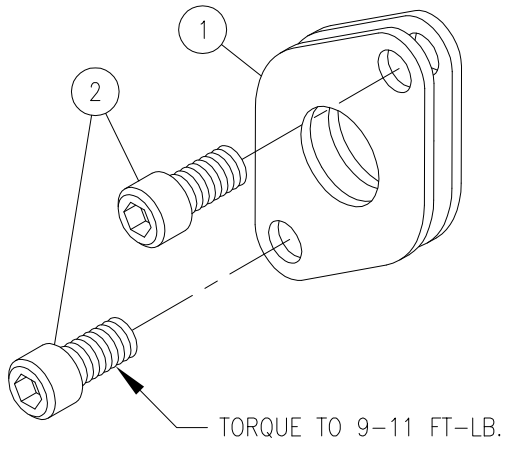

ITEM	QTY	PART NO.	DESCRIPTION
1	2	670500044	RETAINER PLATE
2	2	170003017	CAP SCREW

LESS HANDLE, TANG SPOOL END (HANDLE OPTION 5) KIT P/N 660180144

.250 DIA. PIN HOLE

.365 TANG WIDTH

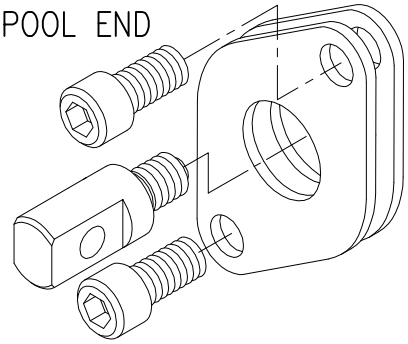

ITEM	QTY	PART NO.	DESCRIPTION
1	2	670500044	RETAINER PLATE
2	2	170003017	CAP SCREW
3	1	671900012	SPOOL ADAPTER, TANG

LESS HANDLE, CLEVIS SPOOL END (HANDLE OPTION 6) KIT P/N 660180145

.187 DIA. PIN HOLE

NOM. SLOT WIDTH .250

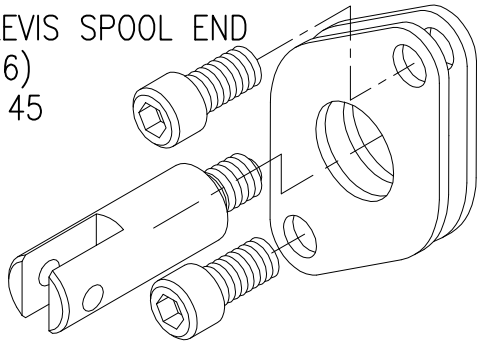

ITEM	QTY	PART NO.	DESCRIPTION
1	2	670500044	RETAINER PLATE
2	2	170003017	CAP SCREW
3	1	671900011	SPOOL ADAPTER, CLEVIS

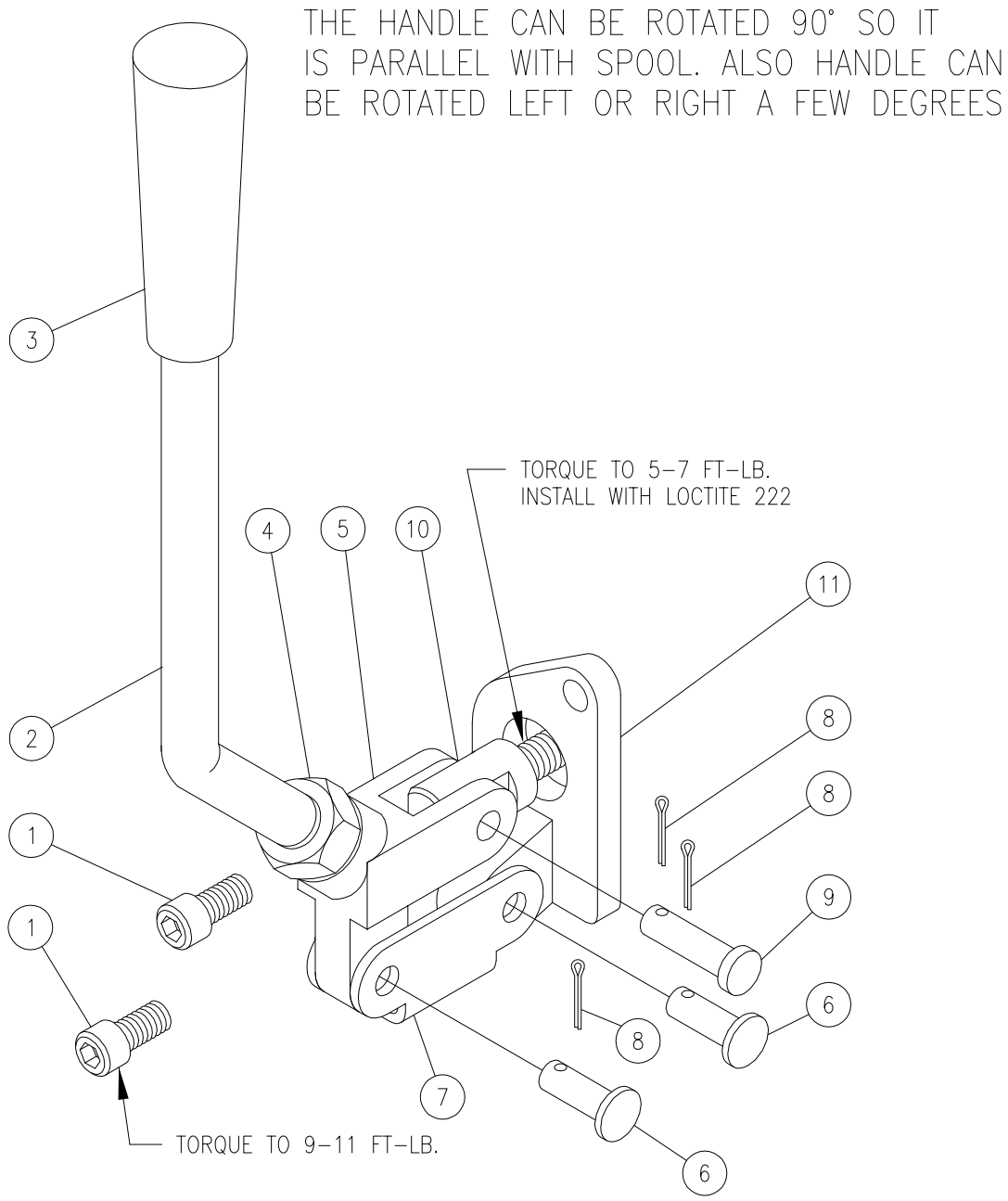

HEAVY DUTY ADJUSTABLE HANDLE (OPTION 4)

ITEM	QTY	PART NO.	DESCRIPTION		
1	2	170003017	CAP SCREW		KIT P/N 660180007
2	1	670400019	ADJUSTABLE HANDLE	KIT P/N 660180006	
3	1	670400020	KNOB		
4	1	220000131	JAM NUT		
5	1	671400035	ADAPTER		
6	2	671700017	CLEVIS PIN		
7	1	670500072	CLEVIS LINK		
8	3	220001512	COTTER PIN		
9	1	671700015	CLEVIS PIN		
10	1	671900012	SPOOL ADAPTER		
11	1	671400034	CLEVIS		

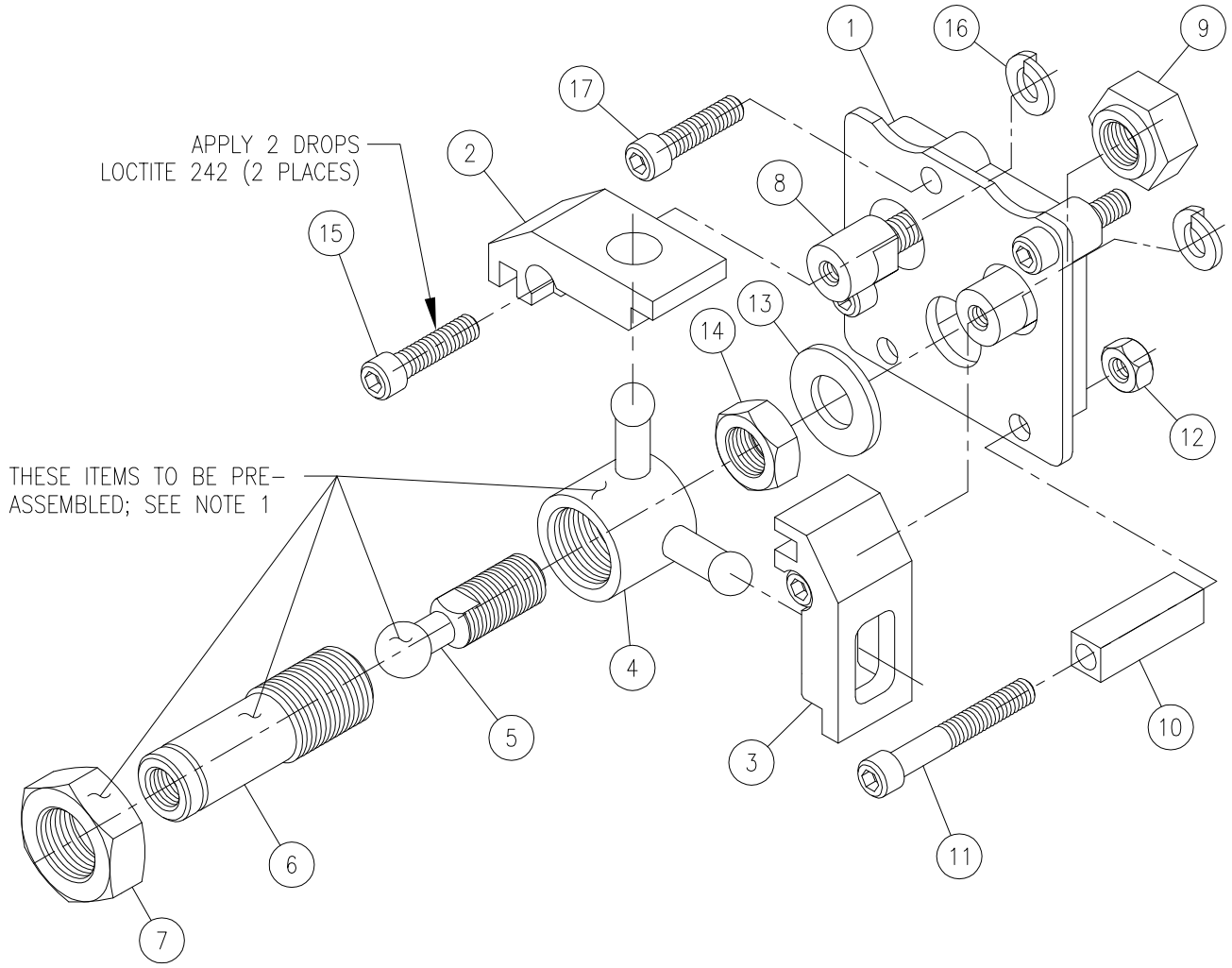

JOYSTICK SUB-ASSY, KIT P/N 660180055:

ITEM	QTY	PART NO.	DESCRIPTION
1	1	671400039	END PLATE
2	1	671400045	SLIDE BLOCK
3	1	671400038	SLIDE BLOCK
4	1	671400022	PIVOT
5	1	671900015	BALL CENTER
6	1	671900008	HANDLE ADAPTER
7	1	220001308	JAM NUT
8	2	671400046	SPOOL ADAPTER
9	1	671400056	HEX NUT
10	1	671400063	STABILIZER
11	1	170003034	HEX SOCKET CAP SCREW
12	1	220000101	HEX NUT
13	1	220001148	WASHER
14	1	220001306	JAM NUT
15	2	170003018	HEX SOCKET CAP SCREW
16	2	220001226	LOCK WASHER
17	3	170003038	HEX SOCKET CAP SCREW

NOTES:
JOYSTICK ASSEMBLY INSTRUCTIONS:

1. HANDLE ADAPTER (ITEM 6) TO BE INSTALLED INTO PIVOT (ITEM 4) UNTIL IT MAKES CONTACT ON BALL CENTER (ITEM 5). TURN HANDLE ADAPTER 1/4 TURN BACK OUT AND TIGHTEN JAM NUT (ITEM 7) TO 60–80 FT–LBS. APPLY TWO DROPS LOCTITE 242 TO THREADS OF JAM NUT (ITEM 7) DURING ASSEMBLY.
2. TO ADJUST HANDLE ANGLE, TURN BALL CENTER (ITEM 5) UNTIL DESIRED ANGLE IS OBTAINED. THEN TIGHTEN JAM NUT (ITEM 14).
3. DURING ASSEMBLY, APPLY PERMATEX ANTI–SEIZE HIGH STRESS LUBRICANT TO BALL CENTER (ITEM 5) AND SPHERICAL ENDS OF PIVOT (ITEM 4).
4. AFTER ASSEMBLY PIVOT (ITEM 4) MUST MOVE FREELY AND HANDLE MUST RETURN TO NEUTRAL FROM ALL POSITIONS.
5. TORQUE ALL 1/4–20 CAP SCREWS TO 9–11 FT–LB (110–130 IN–LB).
6. INSTALL CAP SCREW (ITEM 11), SUPPORT (ITEM 10), AND HEX NUT (ITEM 12) LAST. TORQUE HEX NUT (ITEM 12) TO 9–11 FT–LB (110–130 IN–LB).
7. TORQUE FOR ITEM 8 TO BE 14–16 FT–LB (165–190 IN–LB), INSTALL WITH LOCTITE 242.
   ITEMS 8 & 16 INSTALL ONTO END OF VALVE SPOOLS.

NOTES:
1. SPECIFY WORK SECTION HANDLE OPTION 9 (BLANK – i.e. NO ADDED INDIVIDUAL SECTION PARTS) WHEN A JOYSTICK IS TO BE INSTALLED.

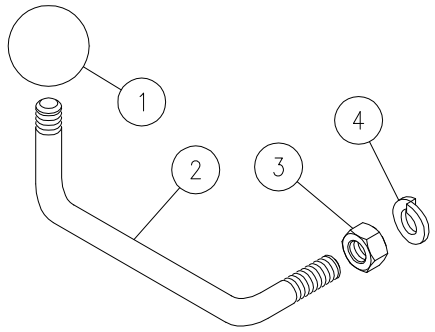

BENT JOYSTICK HANDLE KIT

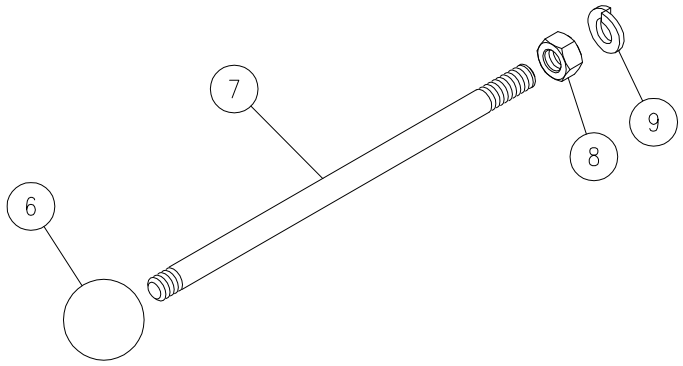

STRAIGHT JOYSTICK HANDLE KIT

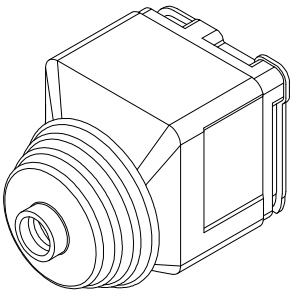

PROTECTIVE RUBBER BOOT
FOR JOYSTICK HANDLE;
P/N 671300011 *

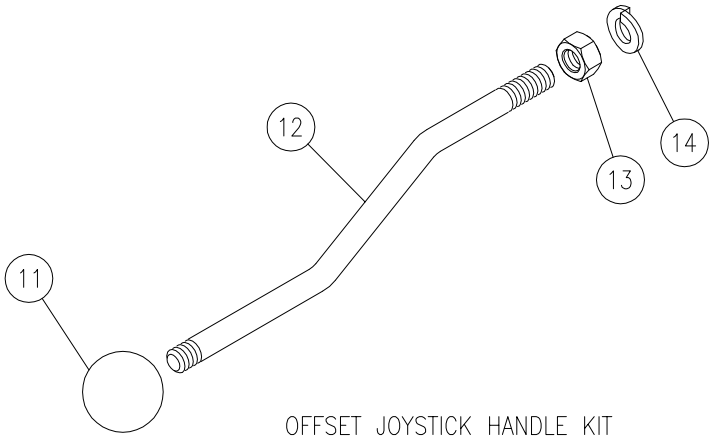

OFFSET JOYSTICK HANDLE KIT

JOYSTICK ASSY W/BENT HANDLE

ITEM	QTY	PART NO.	DESCRIPTION		
1	1	670400002	KNOB	HANDLE KIT P/N 660180044	COMPL. JOYSTICK ASSY w/ HANDLE: KIT P/N: 660180033 FACTORY INSTALLED P/N: SVJB
2	1	670400033	HANDLE, BENT		
3	1	220000121	HEX NUT		
4	1	220001004	LOCK WASHER		
5	1	660180055	JOYSTICK SUB-ASSY (SEE PREVIOUS PAGE)		

JOYSTICK ASSY W/STRAIGHT HANDLE

ITEM	QTY	PART NO.	DESCRIPTION		
6	1	670400002	KNOB	HANDLE KIT P/N 660150006	COMPL. JOYSTICK ASSY w/ HANDLE: KIT P/N: 660180017 FACTORY INSTALLED P/N: SVJS
7	1	670400014	HANDLE, STRAIGHT		
8	1	220000121	HEX NUT		
9	1	220001004	LOCK WASHER		
10	1	660180055	JOYSTICK SUB-ASSY (SEE PREVIOUS PAGE)		

JOYSTICK ASSY W/OFFSET HANDLE

ITEM	QTY	PART NO.	DESCRIPTION		
11	1	670400002	KNOB	HANDLE KIT P/N 660180047	COMPL. JOYSTICK ASSY w/ HANDLE: KIT P/N: 660180018 FACTORY INSTALLED P/N: SVJO
12	1	670400023	HANDLE, OFFSET		
13	1	220000121	HEX NUT		
14	1	220001004	LOCK WASHER		
15	1	660180055	JOYSTICK SUB-ASSY (SEE PREVIOUS PAGE)		

* NOTE: BOOT (671300011) IS TO BE ORDERED IN ADDITION TO JOYSTICK SUB-ASSEMBLY AND HANDLE KIT.

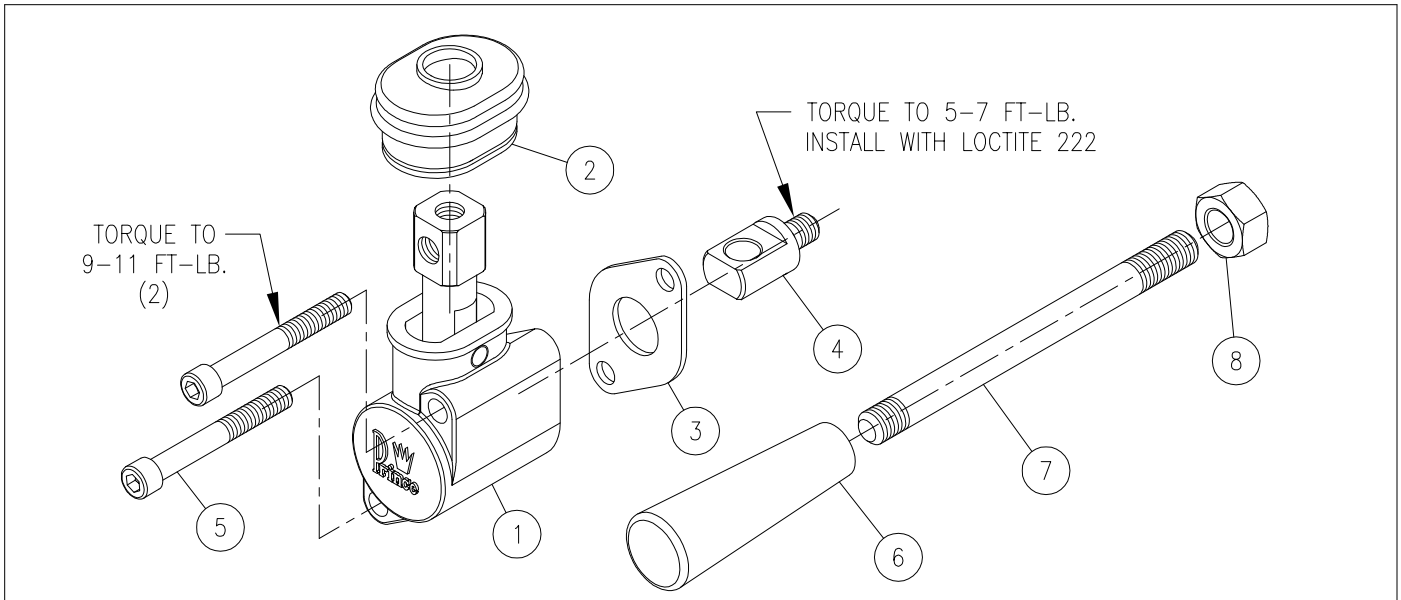

ENCLOSED HANDLE ASSY; SVW, SVM & SVF ONLY (OPTION 11)

ITEM	QTY	PART NO.	DESCRIPTION		
1	1	660380012	ENCLOSED HANDLE SUB-ASSY.	ENCL. HANDLE ASSY P/N 660180149	COMPLETE ENCL HANDLE KIT P/N 660180183
2	1	671300045	BOOT (INCLUDED IN ITEM 1)		
3	1	670500044	RETAINER PLATE		
4	1	671900089	SPOOL ADAPTER		
5	2	170003019	CAP SCREW		
6	1	670400020	HANDLE KNOB	HANDLE KIT P/N 660180150	
7	1	670400083	HANDLE		
8	1	220000129	HEX NUT		

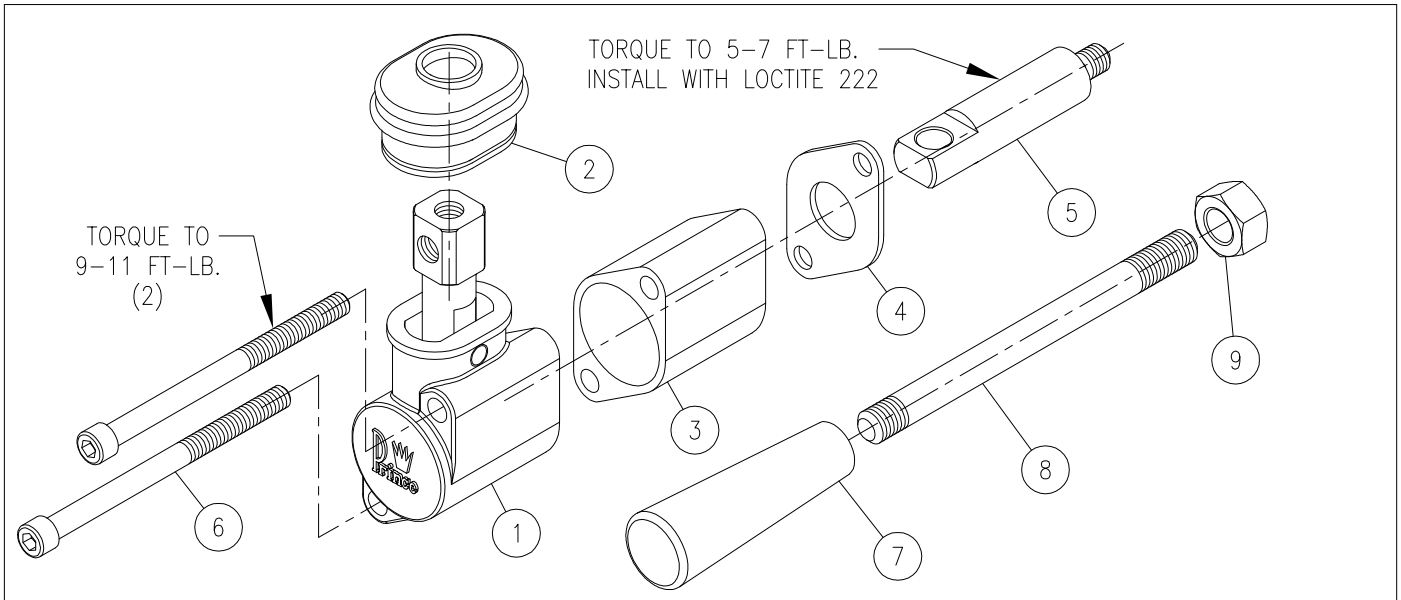

EXTENDED ENCLOSED HANDLE ASSY (OPTION 12)

ITEM	QTY	PART NO.	DESCRIPTION		
1	1	660380012	ENCLOSED HANDLE SUB-ASSY.	ENCL. HANDLE ASSY P/N 660180151	COMPLETE ENCL HANDLE KIT P/N 660180184
2	1	671300045	BOOT (INCLUDED IN ITEM 1)		
3	1	671200007	SPACER		
4	1	670500044	RETAINER PLATE		
5	1	671900091	SPOOL ADAPTER		
6	2	170003069	CAP SCREW		
7	1	670400020	HANDLE KNOB	HANDLE KIT P/N 660180150	
8	1	670400083	HANDLE		
9	1	220000129	HEX NUT		

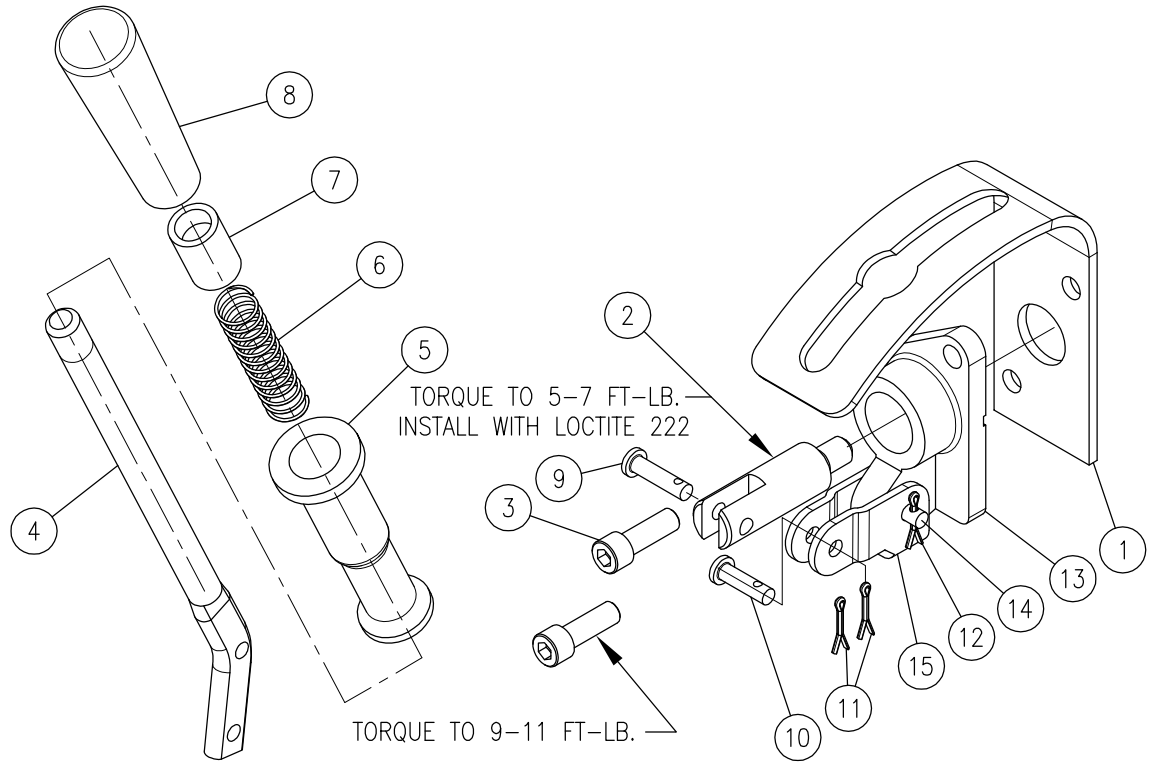

LOCKING HANDLE ASSY, SV (HANDLE OPTION 13)

ITEM	QTY	PART NO.	DESCRIPTION		
1	1	670500137 *	HANDLE GUIDE		LOCKING HANDLE KIT, COMPLETE P/N 660180236
2	1	671900011	ADAPTER, SPOOL		
3	2	170003008 *	CAP SCREW		
4	1	670400120 *	HANDLE	LOCKING HANDLE KIT P/N 660180241	
5	1	671400334 *	HANDLE SLEEVE		
6	1	670300146 *	SPRING		
7	1	671200069 *	SPRING SPACER		
8	1	670400020 *	HANDLE KNOB		
9	1	671700014	CLEVIS PIN (LONG)		
10	1	671700012	CLEVIS PIN (SHORT)		
11	2	220001512	COTTER PIN		
12	1	220001512	COTTER PIN	CLEVIS SUB–ASSY P/N 660180032	
13	1	671400040	CLEVIS		
14	1	671700014	CLEVIS PIN (LONG)		
15	1	670500047	CLEVIS LINK		

NOTES:
1. * – A CONVERSION KIT IS AVAILABLE WHICH ALLOWS AN EXISTING WORK SECTION WITH A STANDARD MANUAL HANDLE TO BE CONVERTED TO A LOCKING HANDLE.
CONVERSION KIT #660180234 CONTAINS ITEMS 1, 3, 4, 5, 6, 7 & 8 ABOVE.
2. THIS HANDLE KIT IS COMPATIBLE WITH "LOW" WORK SECTIONS ONLY (SVW, SVM, SVF & SVL).

'SVI' INLET SECTION

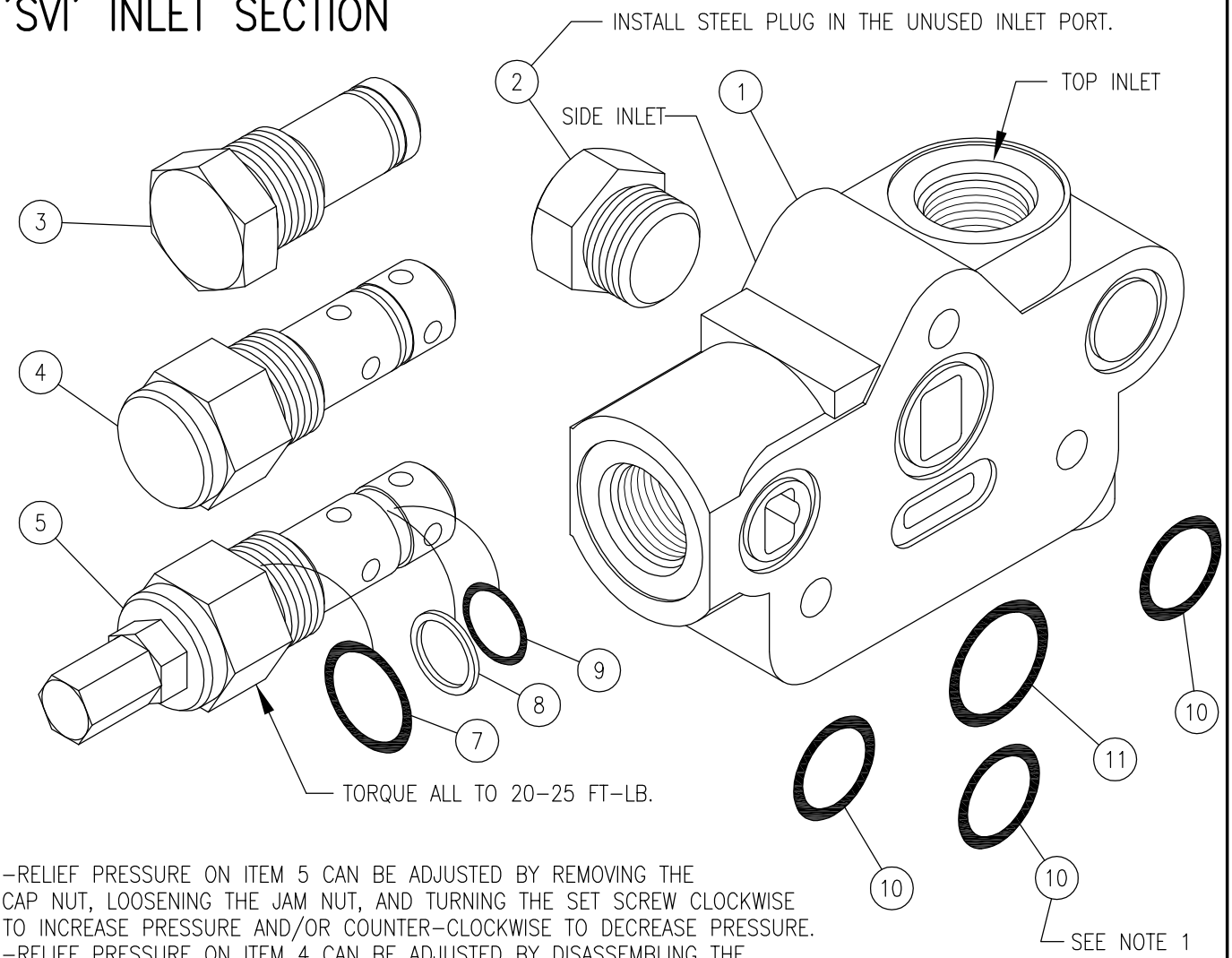

-RELIEF PRESSURE ON ITEM 5 CAN BE ADJUSTED BY REMOVING THE CAP NUT, LOOSENING THE JAM NUT, AND TURNING THE SET SCREW CLOCKWISE TO INCREASE PRESSURE AND/OR COUNTER-CLOCKWISE TO DECREASE PRESSURE.
-RELIEF PRESSURE ON ITEM 4 CAN BE ADJUSTED BY DISASSEMBLING THE CARTRIDGE AND ADDING OR REMOVING SHIMS AS REQUIRED.

WARNING: OVERPRESSURE MAY CAUSE SUDDEN AND UNEXPECTED FAILURE OF A COMPONENT IN THE HYDRAULIC SYSTEM RESULTING IN SERIOUS PERSONAL INJURY. ALWAYS USE A GAUGE WHEN ADJUSTING A RELIEF VALVE.

USES CASTING #C-576

ITEM	QTY	PART NO.	DESCRIPTION
1	1	625764001	INLET BODY #8 SAE (PORT OPTION 1)
1	1	625765001	INLET BODY #10 SAE (PORT OPTION 2)
2	1	200300040	HEX PLUG (STEEL) #8 SAE
2	1	200400030	HEX PLUG (STEEL) #10 SAE
3	1	660250006	OPTION 1 NO-RELIEF PLUG ASSY
4	1	660250005 *	OPTION 2 SHIM-ADJUST. RELIEF CART. 500-1500 PSI (* STD SETTING 1000 PSI IN ASSY)
4	1	660250004 *	OPTION 3 SHIM-ADJUST. RELIEF CART. 1500-3000 PSI (* STD SETTING 2000 PSI IN ASSY)
5	1	660250003 *	OPTION 4 ADJUST. RELIEF CART. 500-1500 PSI (* STD SETTING 1000 PSI IN ASSY)
5	1	660250002 *	OPTION 5 ADJUST. RELIEF CART. 1500-3000 PSI (* STD SETTING 2000 PSI IN ASSY)
5	1	660250010	OPTION 7 ADJUST. RELIEF CART. 2000-3500 PSI (* STD SETTING 2500 PSI IN ASSY)
6	1	200013107	OPTION 6 PLUG, PLASTIC, IN CAVITY PORT (RELIEF TO BE ADDED BY CUSTOMER)
7	1	240000116	-116 O-RING } REPLACEMENT CART. SEAL KIT P/N 660590001 } REPLACEMENT INLET SEAL KIT P/N 660580002
8	1	240019015	BACK-UP WASHER
9	1	240000015	-015 O-RING
10	3	240000018	-018 O-RING } BETWEEN SECTION SEAL KIT P/N 660580004
11	1	240000021	-021 O-RING
		672000101	.015 SHIM
		672000102	.033 SHIM
		672000103	.060 SHIM
		660180215	SHIM ASSORT.

* NOTE: RELIEF CARTRIDGE PART NUMBERS LISTED ABOVE ARE NOT PRESET. INLET RELIEF CARTRIDGE OPTIONS 2, 3, 4 & 5 CAN BE ORDERED PRESET TO A SPECIFIC PRESSURE, SEE 'RV-0xx' ORDER CODE IN CATALOG.

SVIM MID-INLET SECTION

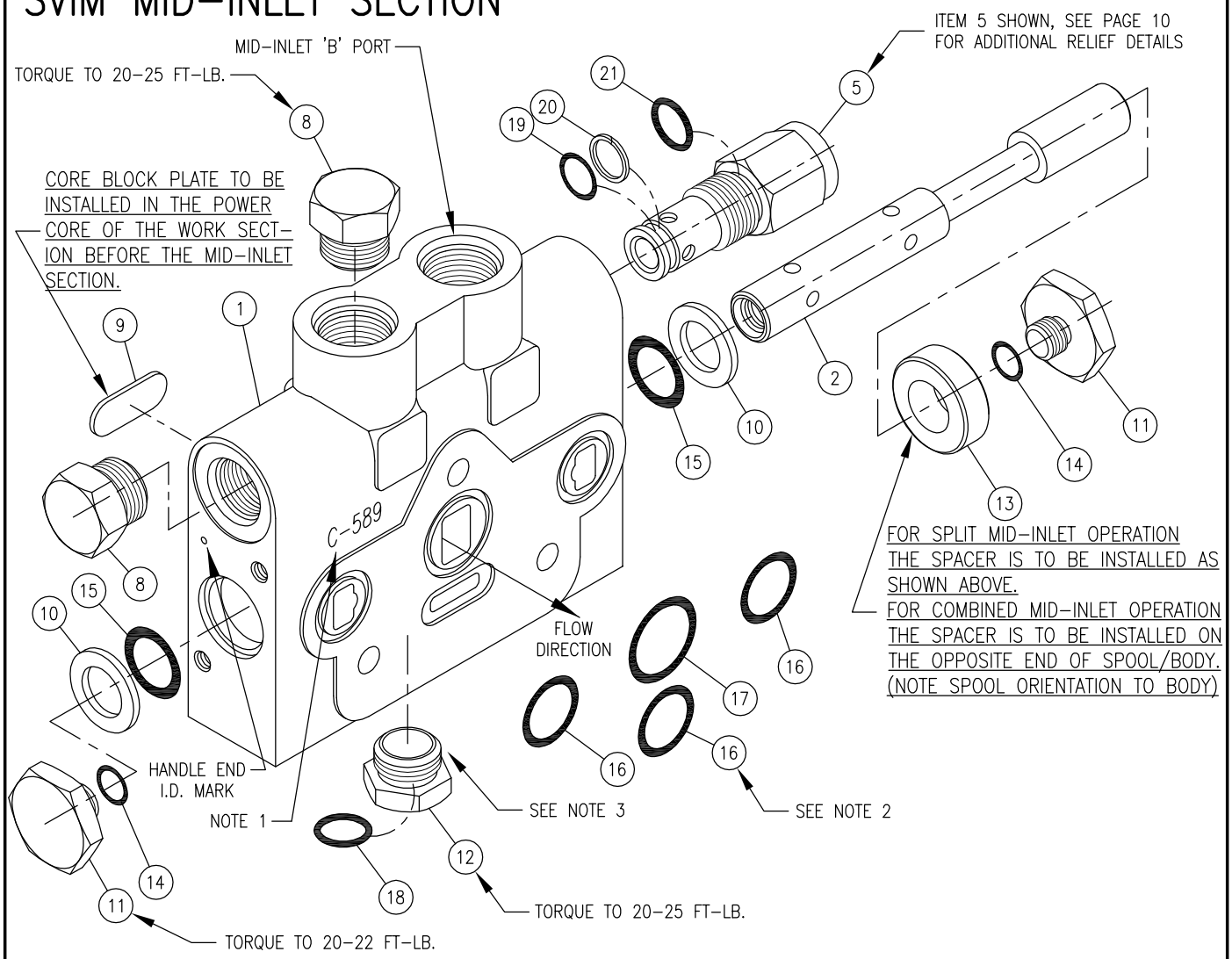

ITEM	QTY	PART NO.	DESCRIPTION
1	1		VALVE BODY } These are matched parts and are not sold seperately.
2	1		SPOOL } These are matched parts and are not sold seperately.
3	1	660280004	NO-RELIEF PLUG (OPTION 1)
4	1	660280010 *	SHIM ADJUSTABLE DIRECT ACTING RELIEF 500-1500 PSI (OPTION 2)
5	1	660280003 *	SHIM ADJUSTABLE DIRECT ACTING RELIEF 1500-3000 PSI (OPTION 3)
6	1	660280011 *	ADJUSTABLE DIRECT ACTING RELIEF 500-1500 PSI (OPTION 4)
7	1	660280009 *	ADJUSTABLE DIRECT ACTING RELIEF 1500-3000 PSI (OPTION 5)
8	2	200300040	STEEL PLUG
9	1	670500055	CORE BLOCK PLATE
10	2	670500045	SPOOL BACK-UP
11	2	671600118	PLUG, END
12	1	671600049	PLUG, HEX
13	1	671200035	SPACER
14	2	240000904	-904 O-RING
15	2	240000208	-208 O-RING
16	3	240000018	-018 O-RING } SEAL KIT P/N 660580004
17	1	240000021	-021 O-RING } SEAL KIT P/N 660580004
18	1	240000908	-908 O-RING
19	1	240000014	-014 O-RING } SEAL KIT P/N 660580022
20	1	240019014	BACK-UP WASHER } SEAL KIT P/N 660580022
21	1	240000908	-908 O-RING } SEAL KIT P/N 660580022

SVIM REPLACEMENT SEAL KIT P/N 660580016

* THESE P/N ARE NOT PRESET; SEE PAGE 10.

NOTES:

1. SVIM MID-INLET SECTIONS HAVE 'C-589' CASTING NUMBER IN LOCATION SHOWN ABOVE.
2. THIS O-RING GOES INTO THE OVAL COUNTERBORE IN THE SIDE OF THE VALVE BODY.
3. SVIM MID-INLET SECTIONS DO NOT HAVE A LOAD CHECK SPRING/POPPET INSTALLED. POPPET WILL PREVENT OPERATION.

SVIF FLOW CONTROL INLET SECTION

TORQUE TO 20–25 FT–LB.; INSTALL IN UNUSED INLET PORT

TORQUE CARTRIDGE TO 20–25 FT–LB.

TORQUE NUT APPROX. 10 FT–LB.

MANUAL OVERRIDE; TURN CLOCK–WISE FOR FLOW TO POWER CORE

TORQUE TO 20–25 FT–LB. (RELIEF OPTION 5 SHOWN)

USED ONLY WITH PORT OPTION '2'; NORMALLY INSTALLED ONLY WHEN THE EXCESS FLOW PORT (EF) IS CONNECTED TO A SECOND CIRCUIT

RELIEF PRESSURE SETTING OF ADJUSTABLE CARTRIDGES (REF. ITEM 7) CAN BE ADJUSTED BY REMOVING THE CAP NUT, LOOSENING THE JAM NUT AND TURNING THE SET SCREW CLOCKWISE TO INCREASE PRESSURE AND COUNTER–CLOCKWISE TO DECREASE PRESSURE.

WARNING: OVERPRESSURE MAY CAUSE SUDDEN AND UNEXPECTED FAILURE OF A COMPONENT IN THE HYDRAULIC SYSTEM RESULTING IN SERIOUS PERSONAL INJURY. ALWAYS USE A GAUGE WHEN ADJUSTING A RELIEF VALVE.

USES CASTING #C–760

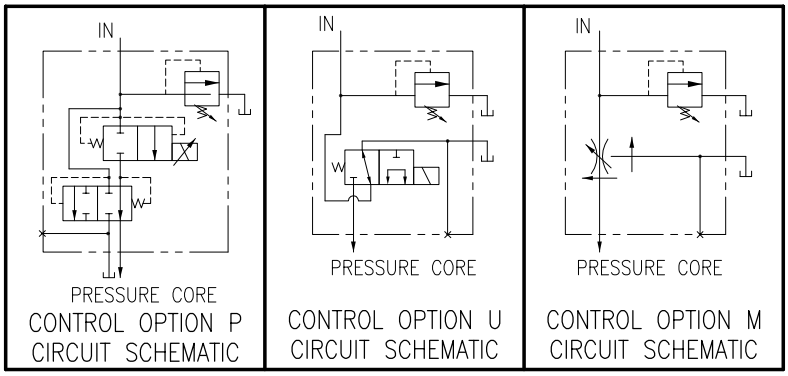

CONTROL OPTION P CIRCUIT SCHEMATIC | CONTROL OPTION U CIRCUIT SCHEMATIC | CONTROL OPTION M CIRCUIT SCHEMATIC

SVIF FLOW CONTROL INLET SECTION (CONT'D.)

ITEM	QTY	PART NO.	DESCRIPTION
1	1	627604001	INLET BODY
2	1	660280055	OPTION M; MANUAL FLOW CONTROL CARTRIDGE
3	1	SEE CHART	OPTION P; PROPORTIONAL FLOW CARTRIDGE W/ NUT
4	1	SEE CHART	SOLENOID COIL FOR USE WITH PROPORTIONAL CARTRIDGE (P)
5	1	SEE CHART	OPTION U; INLET UNLOADING CARTRIDGE W/ NUT
6	1	SEE CHART	SOLENOID COIL FOR USE WITH INLET UNLOADING CARTRIDGE (U)
7	1	660250006	RELIEF OPTION 1; NO RELIEF PLUG
7	1	660250005	RELIEF OPTION 2; CARTRIDGE, NON-ADJ LOW PRESSURE 500-1500 PSI
7	1	660250004	RELIEF OPTION 3; CARTRIDGE, NON-ADJ HIGH PRESSURE 1500-3000 PSI
7	1	660250003	RELIEF OPTION 4; CARTRIDGE, ADJ LOW PRESSURE 500-1500 PSI
7	1	660250002	RELIEF OPTION 5; CARTRIDGE, ADJ HIGH PRESSURE 1500-3000 PSI
8	1	200400030	PORT PLUG (STEEL) #10 SAE
9	1 *	200018001	PIPE PLUG, 1/4-NPTF (* -USE ONLY ON PORT OPTION 2, EXTERNAL 'EF' CIRCUIT)
10	1	240000116	-116 O-RING
11	1	240019015	BACK-UP WASHER
12	1	240000015	-015 O-RING
13	3	240000018	-018 O-RING } REPLACEMENT SEAL
14	1	240000021	-021 O-RING } KIT NO. 660580004

REPLACEMENT SEAL KIT NO. 660580002

FLOW CONTROL COIL/CARTRIDGE DATA:

FLOW CONTROL OPTION 'P'; ELECTRO-PROPORTIONAL			FLOW CONTROL OPTION 'U'; INLET UNLOADING			
CARTRIDGE/COIL ASSY. P/N:	ITEM 3 CART. P/N:	ITEM 4 COIL P/N:	CARTRIDGE/COIL ASSY. P/N:	ITEM 5 CART. P/N:	ITEM 6 COIL P/N:	COIL DESCRIPTION:
660381000	660280058	671302120	660381010	660280059	671302100	12 VOLT DC COIL WITH DUAL SPADES
660381001	↑	671302121	660381011	↑	671302101	12 VOLT DC COIL WITH DIN43650
660381002		671302122	660381012		671302102	12 VOLT DC COIL WITH LEADWIRES(2)
660381003		671302123	660381013		671302103	12 VDC COIL LEADS w/WEATHERPAK CONN.
660381004		671302124	660381014		671302104	24 VOLT DC COIL WITH DUAL SPADES
660381005		671302125	660381015		671302105	24 VOLT DC COIL WITH DIN43650
660381006	↓	671302126	660381016	↓	671302106	24 VOLT DC COIL WITH LEADWIRES(2)
660381007	660280058	671302127	660381017		671302107	24 VDC COIL LEADS w/WEATHERPAK CONN.
			660381018	660280059	671302108	12 VDC COIL w/DEUTSCH CONN. & DIODE

P OPTION:

THIS INLET INCORPORATES A SOLENOID OPERATED, ELECTRICALLY VARIABLE THREE PORT PRESSURE-COMPENSATED FLOW CONTROL CARTRIDGE. WITH NO CURRENT GOING THROUGH THE SOLENOID, ALL OF THE INLET FLOW IS DIVERTED TO THE TANK CORE/EF PORT. BY INCREASING THE CURRENT THROUGH THE SOLENOID, THE FLOW BEING DIRECTED TO THE POWER CORE WILL BE PROPORTIONALLY INCREASED. (THE MAXIMUM RATING OF THE CARTRIDGE IS 16 GPM AT 1500 mA) CONTROL CURRENT IS NORMALLY PROVIDED VIA A CONTROLLER CARD PROVIDING A PWM SIGNAL.

U OPTION:

THIS INLET INCORPORATES A SOLENOID OPERATED, 3-WAY, DIRECT ACTING FLOW CONTROL CARTRIDGE. WITH NO CURRENT GOING THROUGH THE SOLENOID, ALL OF THE INLET FLOW IS DIVERTED TO THE TANK CORE/EF PORT. WITH THE SOLENOID ENERGIZED, THE VALVE IS SHIFTED AND ALL INLET FLOW IS DIRECTED TO THE POWER CORE.

M OPTION:

THIS INLET INCORPORATES A MANUALLY OPERATED THREE PORT PRESSURE-COMPENSATED FLOW CONTROL CARTRIDGE. WITH THE FLOW CONTROL KNOB TURNED FULLY IN (CLOCKWISE), ALL OF THE INLET FLOW IS DIVERTED TO THE TANK CORE/EF PORT. BY TURNING THE FLOW CONTROL KNOB COUNTER CLOCKWISE, THE INLET FLOW DIRECTED TO THE POWER CORE WILL BE PROPORTIONALLY INCREASED. (THE MAXIMUM RATING OF THE CARTRIDGE IS 18 GPM. APPROXIMATELY 5 TURNS VARIES THE FLOW FROM NO FLOW TO THE MAXIMUM RATED FLOW OF 18 GPM.)

PORT OPTION 2:

THE FLOW BEING DIRECTED TO THE TANK CORE/EF PORT MAY BE UTILIZED BY A SECOND CIRCUIT BY INSERTING A 1/4-NPTF PIPE PLUG INTO THE TAPPED TANK CORE PASSAGE ON THE SEAL SIDE OF THE CASTING AND THEN CONNECTING THE EF PORT TO THE SECOND CIRCUIT.

SVIM MID-INLET SECTION

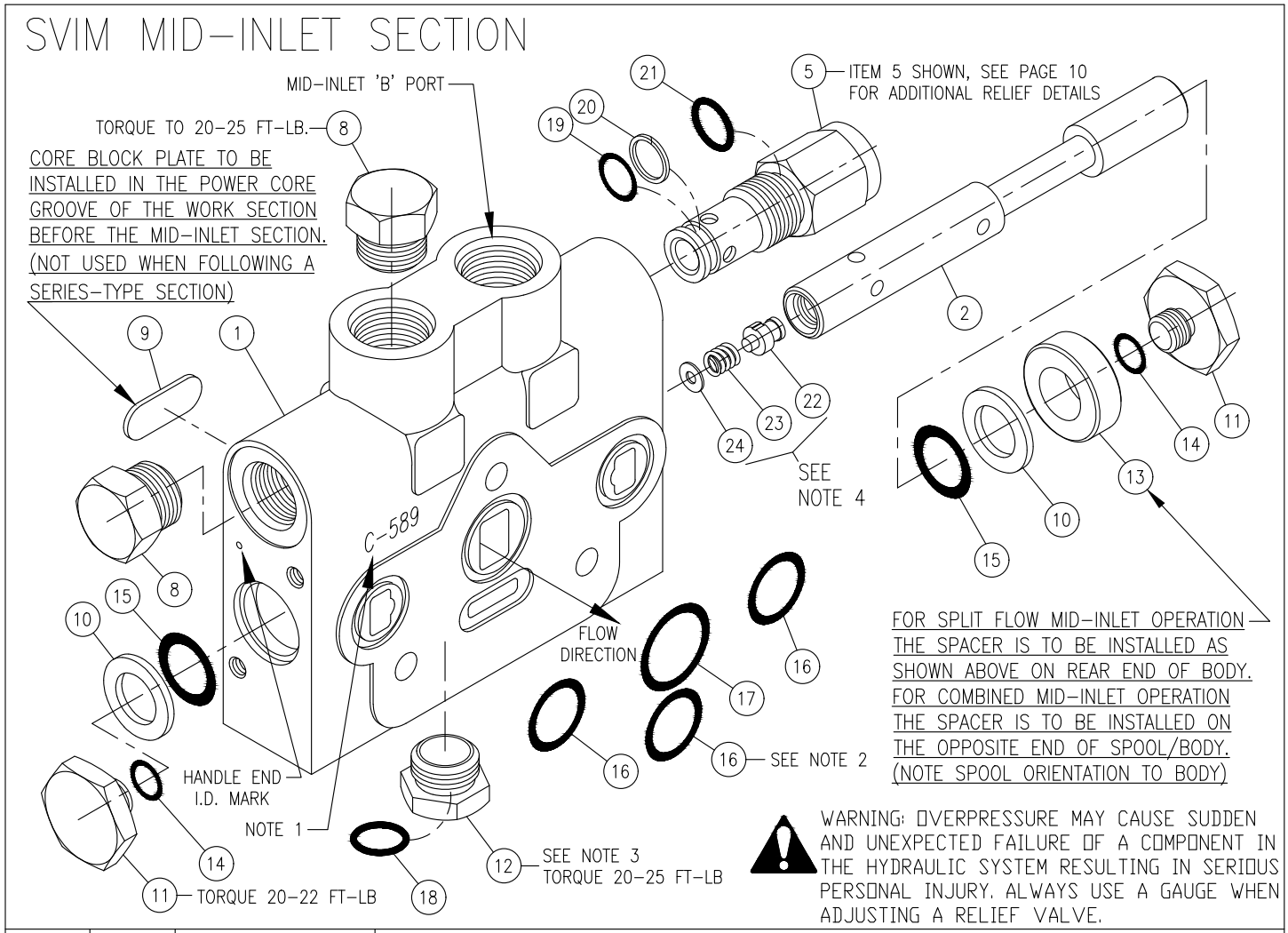

ITEM	QTY	PART NO.	DESCRIPTION
1	1	–	VALVE BODY } These are matched parts and are not sold separately.
2	1	–	SPOOL } These are matched parts and are not sold separately.
3	1	660280004	NO-RELIEF PLUG ASSY (OPTION 1)
4	1	660280010 *	SHIM ADJUSTABLE DIRECT ACTING RELIEF 500-1500 PSI (OPTION 2)
5	1	660280003 *	SHIM ADJUSTABLE DIRECT ACTING RELIEF 1500-3000 PSI (OPTION 3)
6	1	660280011 *	ADJUSTABLE DIRECT ACTING RELIEF 500-1500 PSI (OPTION 4)
7	1	660280009 *	ADJUSTABLE DIRECT ACTING RELIEF 1500-3000 PSI (OPTION 5)
8	2	200300040	HEX PLUG, STEEL
9	1	670500055	CORE BLOCK PLATE
10	2	670500045	SPOOL BACK-UP
11	2	671600118	PLUG, END
12	1	671600049	PLUG, HEX
13	1	671200035	SPACER
14	2	240000904	-904 O-RING
15	2	240000208	-208 O-RING
16	3	240000018	-018 O-RING } SEAL KIT P/N 660580004
17	1	240000021	-021 O-RING } SEAL KIT P/N 660580004
18	1	240000908	-908 O-RING
19	1	240000014	-014 O-RING } SEAL KIT P/N 660580022
20	1	240019014	BACK-UP WASHER } SEAL KIT P/N 660580022
21	1	240000908	-908 O-RING } SEAL KIT P/N 660580022
22	1 **	670100049	POPPET, PRESSURE BUILD-UP (SVIM1Lx & SVIM1Hx ONLY)
23	1 **	670300160	SPRING, PRESSURE BUILD-UP (SVIM1Lx & SVIM1Hx ONLY)
24	1 **	672000004	SHIM, PRESSURE BUILD-UP (SVIM1Lx ONLY)

SVIM REPLACEMENT SEAL KIT P/N 660580016

* THESE P/N ARE NOT PRESET; SEE PAGE 10.

NOTES:
1. SVIM MID-INLET SECTIONS HAVE 'C-589' CASTING NUMBER IN LOCATION SHOWN ABOVE ('HANDLE' END OF STACK ASSY).
2. THIS O-RING GOES INTO THE OVAL COUNTERBORE IN THE SIDE OF THE VALVE BODY.
3. SVIM MID-INLET SECTIONS DO NOT HAVE A LOAD CHECK SPRING/POPPET INSTALLED. POPPET WILL PREVENT OPERATION.
4. ** SVIM1Cx & SVIM1Sx MODELS USE ITEMS 1-21; SVIM1Hx MODELS USE ITEMS 1-23; SVIM1Lx MODELS USE ITEMS 1-24.

SVE OUTLET SECTION

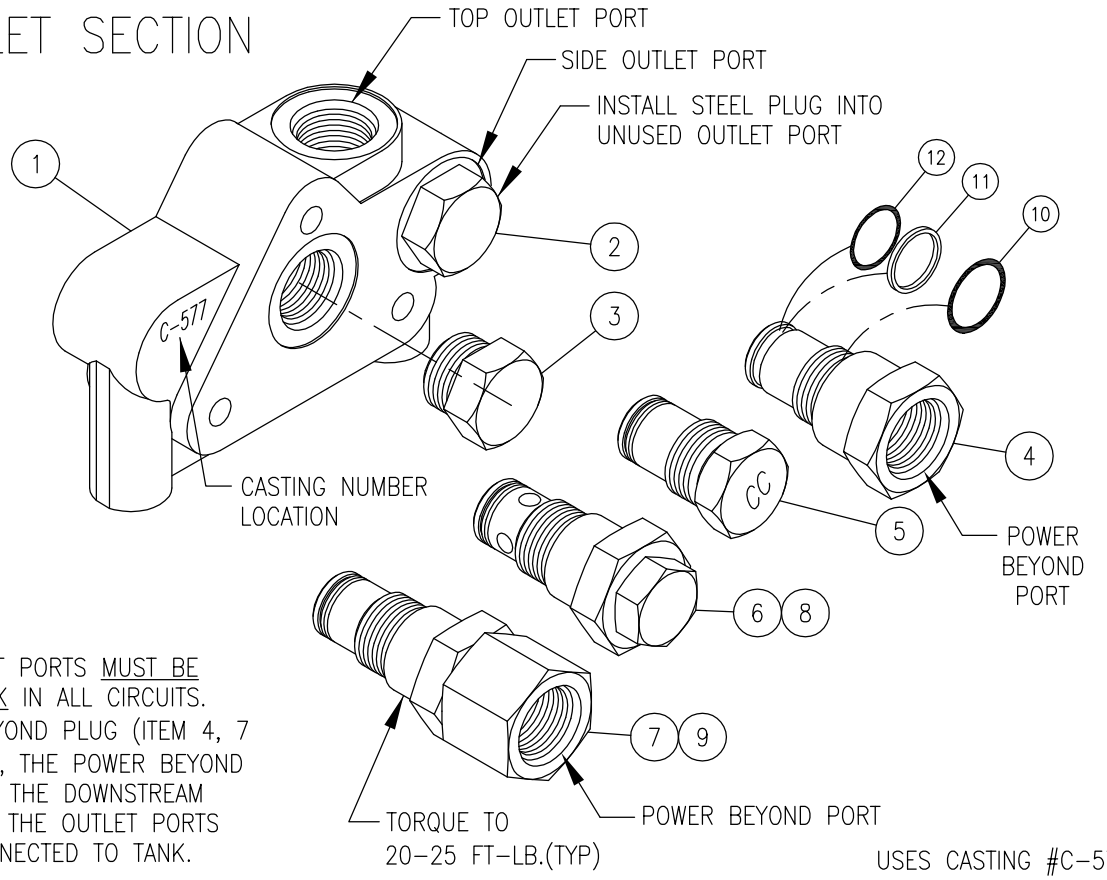

IMPORTANT NOTE:
ONE OF THE OUTLET PORTS MUST BE CONNECTED TO TANK IN ALL CIRCUITS. WHEN A POWER BEYOND PLUG (ITEM 4, 7 OR 9) IS INSTALLED, THE POWER BEYOND PORT CONNECTS TO THE DOWNSTREAM VALVE AND ONE OF THE OUTLET PORTS MUST ALSO BE CONNECTED TO TANK.

USES CASTING #C–577

ITEM	QTY	PART NO.	DESCRIPTION
1	1	625774001	OUTLET BODY #8 SAE (PORT OPTION 1)
1	1	625775001	OUTLET BODY #10 SAE (PORT OPTION 2)
2	1	200300040	PLUG (STEEL) #8 SAE (PORT OPTION 1)
2	1	200400030	PLUG (STEEL) #10 SAE (PORT OPTION 2)
3	1	200400030	OPTION 1, CONVERSION PLUG ASSY, OPEN CENTER
4	1	660280001	OPTION 2, POWER BEYOND CARTRIDGE, #8 SAE BEYOND PORT
5	1	660280002	OPTION 3, CLOSED CENTER PLUG ASSY
6	1	660280093	OPTION 6, PRESSURE BUILD–UP CARTRIDGE, OPEN CENTER
7	1	660280092	OPTION 7, PRESSURE BUILD–UP CARTRIDGE, POWER BEYOND #8 SAE
8	1	660280090	OPTION 8, MEDIUM–PRESSURE BUILD–UP CARTRIDGE, OPEN CENTER
9	1	660280089	OPTION 9, MEDIUM–PRESSURE BUILD–UP CARTRIDGE, POWER BEYOND #8 SAE
10	1	240000910	–910 O–RING } OUTLET SECTION SEAL KIT P/N 660580003
11	1	240005016	BACK–UP WASHER } OUTLET SECTION SEAL KIT P/N 660580003
12	1	240000016	–016 O–RING } OUTLET SECTION SEAL KIT P/N 660580003

OPTION 1: STANDARD OPEN CENTER OUTLET WITH CONVERSION PLUG
This is the standard outlet option. This option allows for conversion in the field for power beyond or closed center applications. When the spools are in neutral the inlet is unloaded to tank.

OPTION 2: POWER BEYOND OUTLET WITH #8 SAE BEYOND PORT
This option provides for a high pressure power beyond port. This would be used if a valve is to be added downstream. The outlet port must be connected to tank. When spools are in neutral the inlet is connected to the power beyond port. When spools are shifted return oil flows through tank port.

OPTION 3: CLOSED CENTER OUTLET
This option provides for closed center operation. This is typically used with a variable displacement pressure compensated pump or in a system with an unloading valve. When the spools are in neutral the inlet port is blocked.

PRESSURE BUILD–UP OUTLETS AS USED FOR SOLENOID OPERATORS:

OPTION 6: OPEN CENTER OUTLET WITH PRESSURE BUILD–UP
When spools are in neutral, this option directs oil from inlet thru a pressure build–up cartridge and then to tank.

OPTION 7: POWER BEYOND WITH PRESSURE BUILD–UP, #8 SAE
When spools are in neutral, this option directs oil from inlet thru pressure build–up cartridge and then downstream. The pressure build–up cartridge provides a high pressure power beyond port. The outlet port must be connected to tank.

OPTION 8: OPEN CENTER OUTLET WITH PRESSURE BUILD–UP (MEDIUM PRESSURE)
When spools are in neutral, this option directs oil from inlet thru a pressure build–up cartridge and then to tank.

OPTION 9: POWER BEYOND WITH PRESSURE BUILD–UP, #8 SAE (MEDIUM PRESSURE)
This option directs oil from inlet thru pressure build–up cartridge and then downstream. The pressure build–up cartridge provides a high pressure power beyond port. The outlet port must be connected to tank.

SV 'S' (10 SERIES) SINGLE ENDED SOLENOID ACTUATOR ASSY

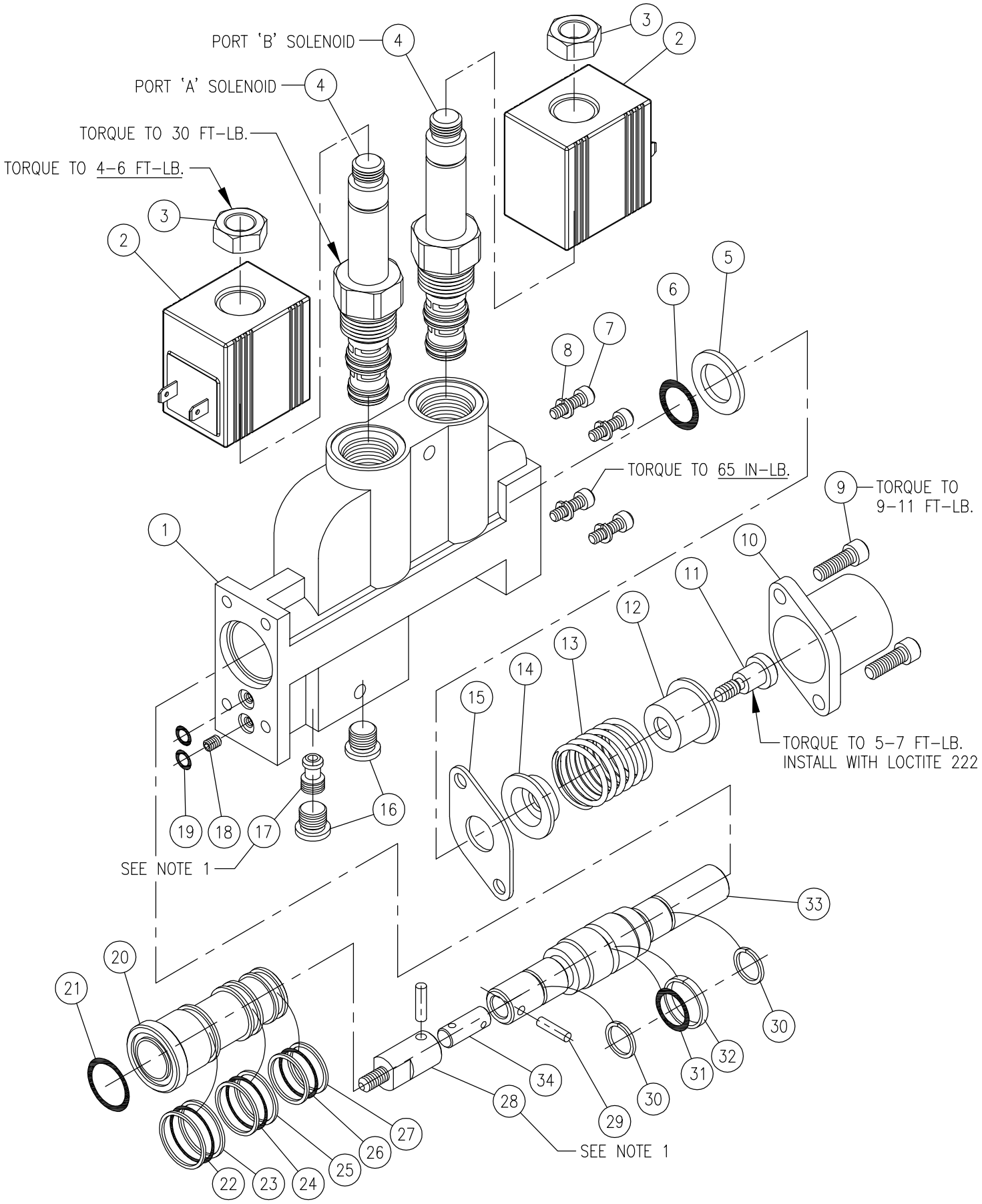

SV 'S' (10 SERIES) SINGLE ENDED SOLENOID ACTUATOR (CONT'D):

ITEM	QTY	PART NO.	DESCRIPTION
1	1	626230001	ACTUATOR BODY
2	2	SEE CHART	SOLENOID COIL
3	2	220001306	COIL NUT (SEE BULLETIN)
4	2	660263021	SOLENOID CARTRIDGE w/NUT
5	1	670500045	SPOOL BACK-UP WASHER
6	1	240000208*	-208 O-RING
7	4	170003037	CAP SCREW
8	4	220001010	LOCK WASHER
9	2	170003008	CAP SCREW
10	1	671400033	END CAP
11	1	671400078	ADAPTER
12	1	671400076	STOP CUP, OUTER
13	1	670300030	SPRING, CENTERING
14	1	671400077	STOP CUP, INNER
15	1	670500044	RETAINER PLATE
16	2	200100189	PLUG, HEX SOCKET
17	1	671600063	PLUG (SEE NOTE 1)
18	1	671400086	ORIFICE PLUG
19	2	240000009*	-009 O-RING
20	1	671400079	SLEEVE
21	1	240000019*	-019 O-RING
22	1	240000020*	-020 O-RING
23	2	240044020*	BACK-UP WASHER
24	1	240000019*	-019 O-RING
25	2	240044019*	BACK-UP WASHER
26	1	240000018*	-018 O-RING
27	2	240044018*	BACK-UP WASHER
28	1	671900071	ADAPTER (SEE NOTE 1)
29	2	190100046	PIN (SEE NOTE 1)
30	2	240019014*	BACK-UP WASHER
31	1	240000113*	-113 O-RING
32	1	240016230*	SEAL RING
33	1	610100011	SPOOL, ACTUATOR
34	1	671400207	PIN (SEE NOTE 1)

S & T (10 SERIES) SOLENOID COIL INFO

OPTION:	DESCRIPTION:	COIL P/N:
12L	12 VDC LEAD WIRES	671302220
12Q	12 VDC DUAL SPADE	671302226
12H	12 VDC DIN-43650	671302221
24L	24 VDC LEAD WIRES	671302223
24Q	24 VDC DUAL SPADE	671302227
24H	24 VDC DIN-43650	671302224
11C	120 VAC CONDUIT	(SEE BULLETIN)
11H	120 VAC DIN-43650	(SEE BULLETIN)
12W	12 VDC "WEATHER-PAK"	(SEE BULLETIN)
12D	12 VDC INTEGRAL DEUTSCH	671302222
24D	24 VDC INTEGRAL DEUTSCH	671302225

* 'S' SOLENOID OPERATED WORK SECTION SEAL KIT (DOES NOT INCL CARTRIDGE SEALS): P/N 660580005

S12Q ACTUATOR PARTS KIT: P/N 660280026 (CONTAINS ITEMS 1-34, AND 2-671302226 COILS)

ACTUATOR PARTS KIT, W/O COILS: P/N 660280091 (CONTAINS ITEM 1 AND ITEMS 3-34)

PLEASE NOTE; THE VALVE BODY MUST BE MACHINED TO ACCEPT THE ACTUATOR BODY. THE SOLENOID OPTION CAN NOT BE ADDED TO A STANDARD NON-SOLENOID WORK SECTION.

1. ITEMS 17 AND 28 ARE INSTALLED AT FACTORY WITH LOCTITE 271 AND CANNOT BE DISASSEMBLED UNDER NORMAL CIRCUMSTANCES.

The Solenoid Operated SV Work Section allows remote electrical on-off or manual control. The Solenoid Operated SV Section may be assembled with other standard SV manual work sections.

The Solenoid Operated SV Section contains two, 3 way-2 position solenoid cartridge valves and a pilot operated piston attached to the main control spool. When both solenoids are de-energized both sides of the pilot piston are open to tank pressure and the spool remains spring centered. When solenoid 'A' is energized, pilot pressure is applied to one side of the pilot piston causing the spool to shift from the neutral position to work port 'A'. when solenoid 'B' is energized, pilot pressure is applied to the other side of the pilot piston causing the spool to shift to work port 'B'.

Internal pilot lines: Internal pilot lines provide pilot pressure to the solenoid actuator. Pilot pressure is generated by a "Pressure Build-Up Valve" that is installed in the standard outlet section. Two versions of the Pressure Build-Up Valve are offered. The Open Center Pressure Build-Up Valve and the Power Beyond Pressure Build-Up Valve. Both versions supply 150-200 PSI pilot pressure to the solenoid actuator. Medium pressure build-up valves supply approximately 50 PSI higher pressure than the standard.

For over center or light load applications: If the required work port load pressure drops below 200 PSI, the pilot pressure to the pilot piston will drop to the same pressure causing the centering spring to move the control spool back towards the neutral position. The spool will end up in an intermediate position between neutral and fully shifted. A restrictor installed in the work port or line may be required for this type of application. (See 661180xxx for SVW, and 670805xxx for SVH, SVM, SVF, SVR, SVL & SVG)

For closed center applications: The Pressure Build-Up Valve is not required. However, a system pressure of 200 PSI must be maintained in the closed center position to actuate the valve properly.

Proper operation of the solenoid actuator requires a pressure differential of 150-200 PSI above tank pressure. The maximum tank port pressure should not exceed 150 PSI. Excessive tank pressure will increase "Seal Drag" and may prohibit the spool from shifting.

SV 'T' (10 SERIES) TANDEM SOLENOID ACTUATOR ASSY.

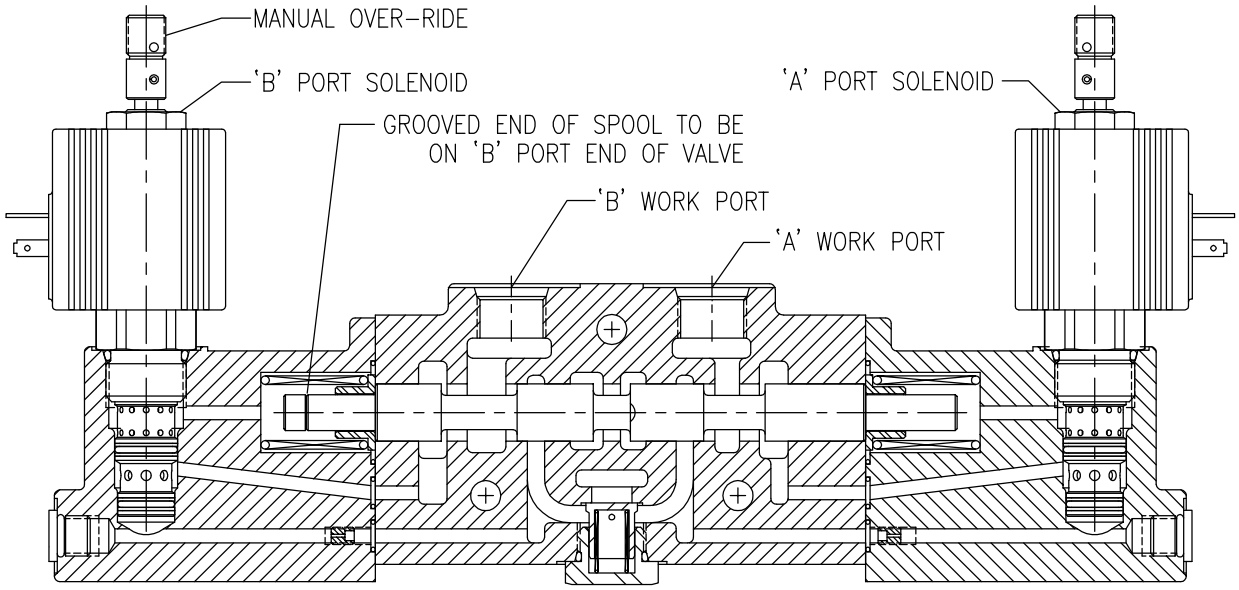

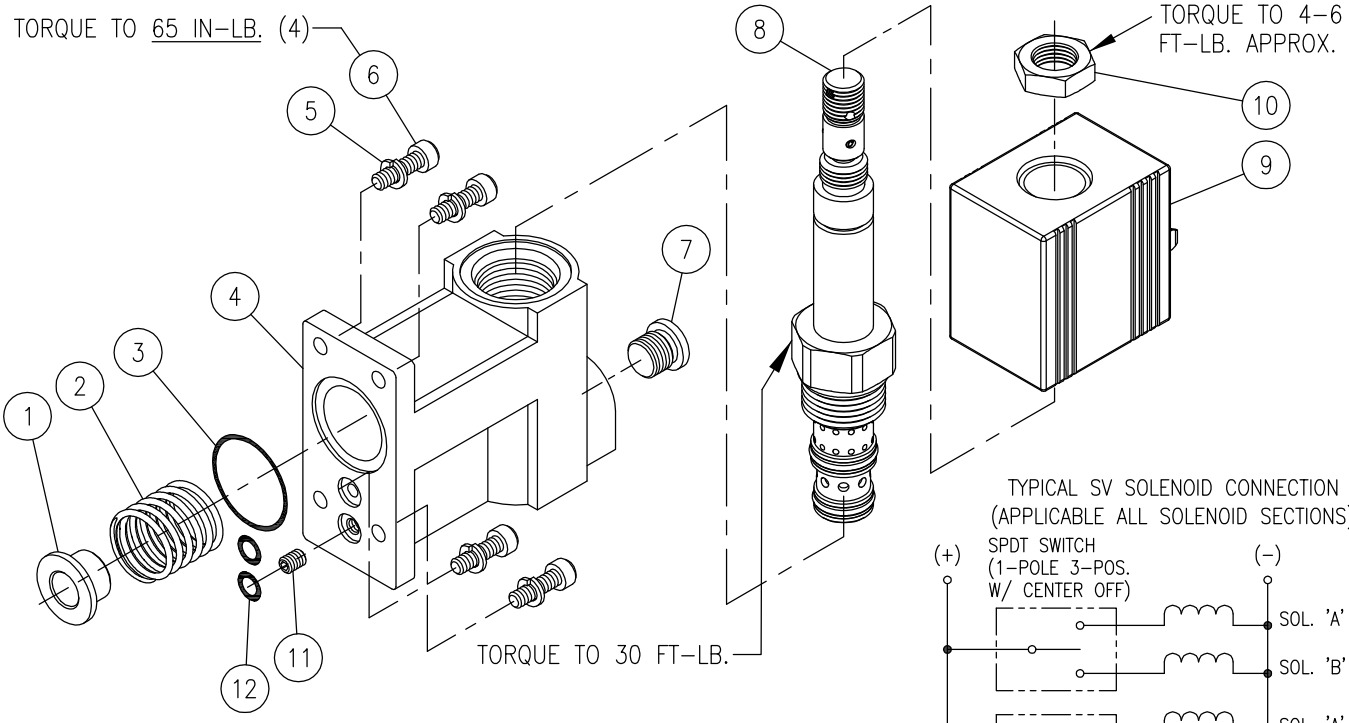

TYPICAL SV SOLENOID CONNECTION
(APPLICABLE ALL SOLENOID SECTIONS)

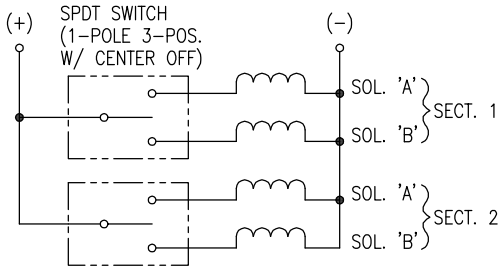

ACTUATOR USES C-635 CASTING

ITEM	QTY. (#)	PART NO.:	DESCRIPTION:
1	1	671400101	SPRING END
2	1	670300063	SPRING, CENTERING
3	1	240000022*	-022 O-RING
4	1	626350001	ACTUATOR BODY
5	4	220001010	LOCK WASHER
6	4	170003037	CAP SCREW #10-24
7	1	200200083	PLUG, HEX SOCKET
8	1	660263023	SOLENOID CARTRIDGE
9	1	SEE CHART ON PAGE 29	SOLENOID COIL
10	1	220001306 (INCL W/CART)	COIL NUT
11	1	671400086	ORIFICE PLUG
12	2	240000009*	-009 O-RING

PLEASE NOTE: THE VALVE BODY IS MACHINED TO ACCEPT THE ACTUATOR BODY. THIS OPTION CAN NOT BE ADDED TO A STANDARD (NON-SOLENOID) WORK SECTION.

* TANDEM SOLENOID ACTUATOR SEAL KIT P/N 660580014

\# QUANTITY SHOWN IS PER ACTUATOR, TWO ACTUATORS ARE REQ'D PER WORK SECTION.

SV 'C/CM' (8 SERIES) SINGLE ENDED SOLENOID ACTUATOR ASSY

PLEASE NOTE; THIS VALVE'S BODY MUST BE MACHINED TO ACCEPT THE ACTUATOR BODY. THE SOLENOID OPTION CANNOT BE ADDED TO A STANDARD NON-SOLENOID WORK SECTION.

SOLENOID CARTRIDGES AND COILS ARE NOT INCLUDED IN ACTUATOR KIT. SEE NEXT PAGE.

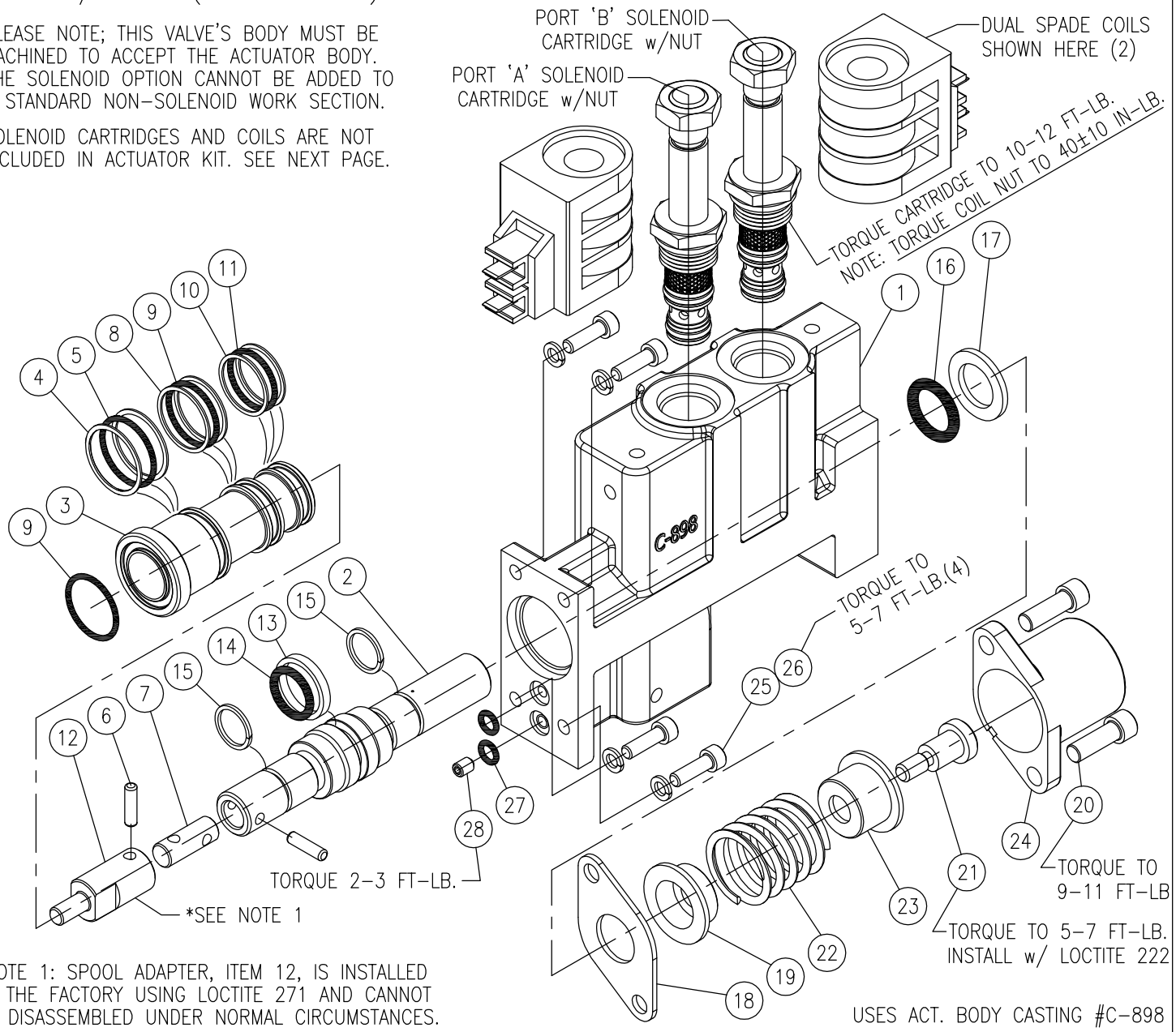

*NOTE 1: SPOOL ADAPTER, ITEM 12, IS INSTALLED AT THE FACTORY USING LOCTITE 271 AND CANNOT BE DISASSEMBLED UNDER NORMAL CIRCUMSTANCES.

SOLENOID ACTUATOR SUB-ASSY. #660180237-KIT (#8 ON-OFF, C/CM)

ITEM	QTY	PART NUMBER	DESCRIPTION
1	1	660380016	#8 ACTUATOR BODY ASSY.
2	1	610100018	ACTUATOR SPOOL
3	1	671400079	SLEEVE
4	2	240044020 *	BACK-UP WASHER
5	1	240000020 *	O-RING
6	2	190100046	PIN, DOWEL
7	1	671400207	PIN
8	2	240044019 *	BACKUP WASHER
9	2	240000019 *	O-RING
10	2	240044018 *	BACKUP WASHER
11	1	240000018 *	O-RING
12	1	671900071	SPOOL ADAPTER
13	1	240016230 *	GLYD-RING
14	1	240000113 *	O-RING
15	2	240019014 *	SEAL, TEFLON
16	1	240000208 *	O-RING, SPOOL SEAL
17	1	670500045	SEAL BACKUP WASHER
18	1	670500044	RETAINER PLATE
19	1	671400077	STOP CUP, INNER
20	2	170003008	HEX SOCKET CAP SCREW
21	1	671400078	SPOOL ADAPTER
22	1	670300030	SPRING, CENTERING
23	1	671400076	STOP CUP, OUTER
24	1	671400033	END CAP
25	4	170003037	HEX SOCKET CAP SCREW
26	4	220001010	LOCK WASHER
27	2	240000009 *	O-RING
28	1	671400086	ORIFICE PLUG, ø.035

* #660580005; SV S/C/CM SOL. HOUSING SEAL KIT

SV 'D/DM/DP' (8 SERIES) DOUBLE ENDED SOL. ACTUATOR ASSY

PLEASE NOTE: THE SECTION'S VALVE BODY MUST BE MACHINED TO ACCEPT THE ACTUATOR BODY. THE SOLENOID OPTION CANNOT BE ADDED TO A STANDARD NON-SOLENOID WORK SECTION.

SOLENOID CARTRIDGES AND COILS ARE NOT INCLUDED IN ACTUATOR KITS. SEE BELOW.

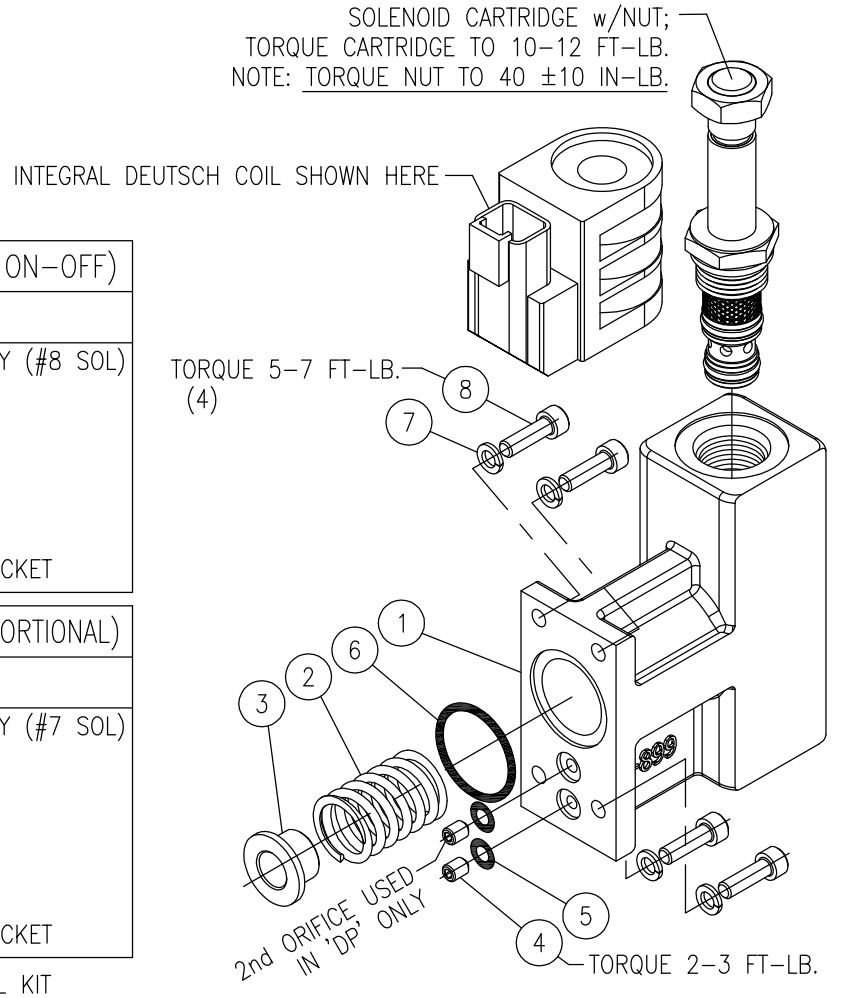

D/DM ACTUATOR ASSY #660180239-KIT (#8 ON-OFF)

ITEM	QTY (#)	PART NUMBER	DESCRIPTION
1	1	660380018	ACTUATOR BODY ASSY (#8 SOL)
2	1	670300063	SPRING, CENTERING
3	1	671400101	SPRING END
4	1	671400086	ORIFICE PLUG, .035
5	2	240000009 *	O-RING
6	1	240000022 *	O-RING
7	4	220001010	LOCK WASHER, SPLIT
8	4	170003037	CAP SCREW, HEX SOCKET

DP ACTUATOR ASSY #660180240-KIT (#7 PROPORTIONAL)

ITEM	QTY (#)	PART NUMBER	DESCRIPTION
1	1	660380019	ACTUATOR BODY ASSY (#7 SOL)
2	1	670300154	SPRING, CENTERING
3	1	671400101	SPRING END
4	2	671400086	ORIFICE PLUG, .035
5	2	240000009 *	O-RING
6	1	240000022 *	O-RING
7	4	220001010	LOCK WASHER, SPLIT
8	4	170003037	CAP SCREW, HEX SOCKET

* #660580014; SV T/D/DM/DP SOL. HOUSING SEAL KIT

\# QTY SHOWN IS PER ACTUATOR, TWO ACTUATORS REQ'D PER WORK SECTION.

USES ACTUATOR BODY CASTING #C-899

SV 'C' & 'D' (8 SERIES) SOLENOID CARTRIDGES & COILS:

SOLENOID CARTRIDGE INFO, C/CM/D/DM ASSY:

OPTION	PART NUMBER	DESCRIPTION
C/D	660263014	#8 CARTRIDGE, STANDARD +
CM/DM	660263015	#8 CARTRIDGE, MANUAL OVER-RIDE +
	660580027	+ SEAL KIT, #8 CARTRIDGE ONLY

SOLENOID CARTRIDGE INFO, DP PROPORTIONAL ASSY:

OPTION	PART NUMBER	DESCRIPTION
DP	660263011	#7 CARTRIDGE, PROPORTIONAL ++
	660580028	++ SEAL KIT, #7 CARTRIDGE ONLY

(NOTE: #7 CARTRIDGES DO NOT INTERCHANGE WITH #8 CARTRIDGES & REQUIRE DIFFERENT BODIES/CAVITIES.)

SOLENOID COIL INFO FOR ALL C/D ASSY'S:

QTY	PART NUMBER	DESCRIPTION
12D	671302163	12 VDC INTEGRAL DEUTSCH
12H	671302168	12 VDC DIN-43650
12L	671302160	12 VDC DUAL LEAD WIRES
12Q	671302165	12 VDC DUAL SPADES
24D	671302164	24 VDC INTEGRAL DEUTSCH
24H	671302169	24 VDC DIN-43650
24L	671302167	24 VDC DUAL LEAD WIRES
24Q	671302166	24 VDC DUAL SPADES
11H	671302170	110 VAC DIN-43650

-SOLENOID CARTRIDGES AND COILS ARE NOT INCLUDED IN ACTUATOR ASSY KITS FOR 8-SERIES (C/D STYLE) VALVES.
-COMPONENTS ARE NOT INTERCHANGEABLE WITH 10-SERIES (S/T STYLE) VALVES.

TYPICAL SV SOLENOID ELECTRICAL CONNECTION
(APPLICABLE ALL SOLENOID SECTIONS)

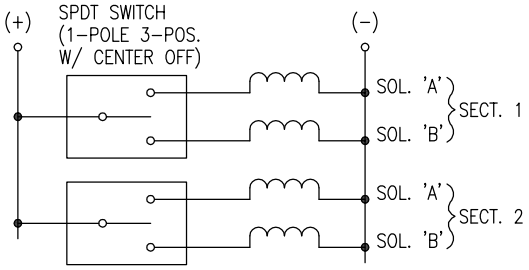

EXAMPLE SV STACK VALVE HYDRAULIC CIRCUIT WITH OPTIONAL POWER BEYOND

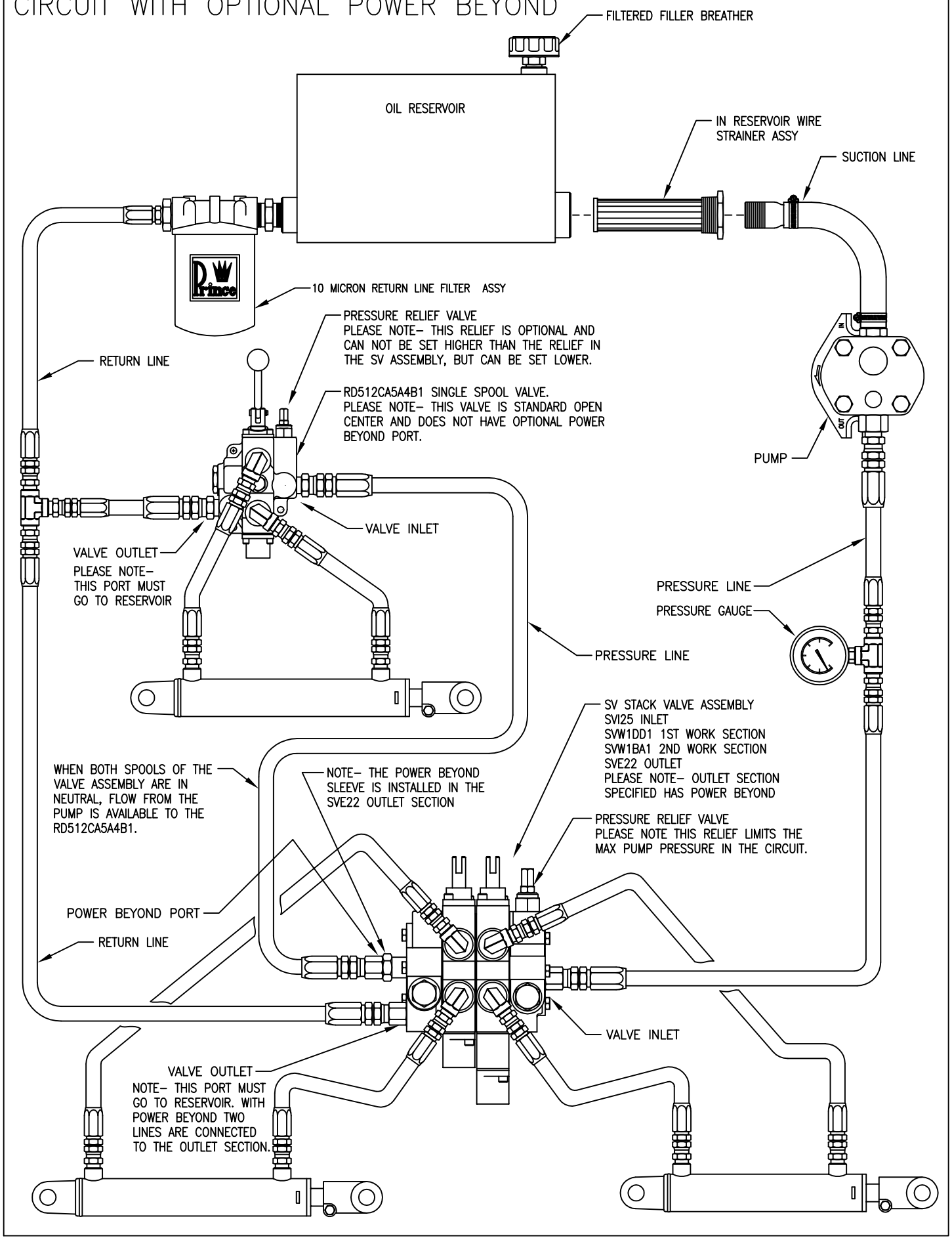

Prince Manufacturing Corporation
612 N. Derby Lane
North Sioux City, SD 57049
phone (605)235-1220
fax (605)235-1082
www.princehyd.com
e-mail: prince@princehyd.com